MICRO-EPSILON

More Precision

thicknessGAUGE // Sensor system for inline thickness measurements

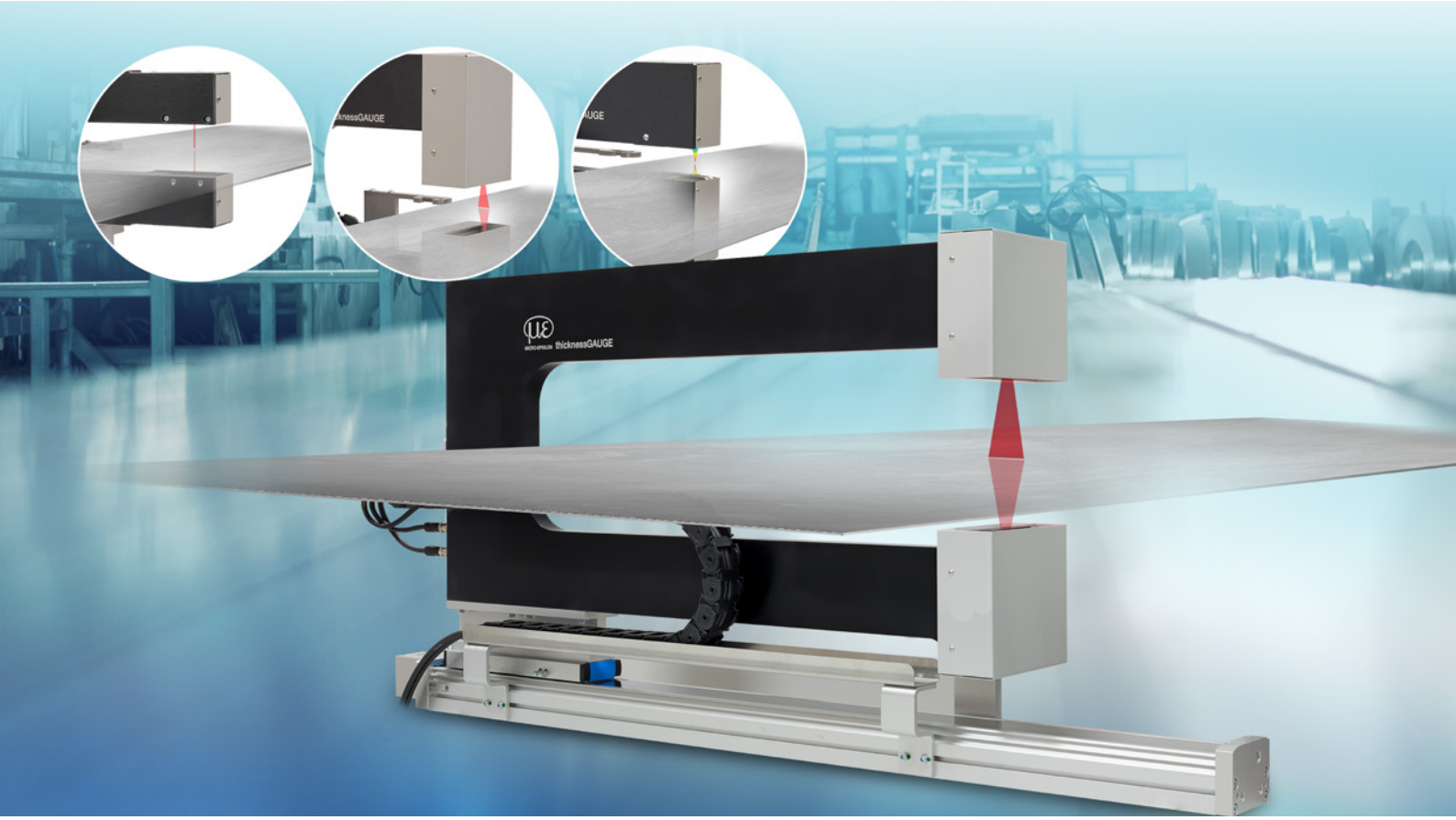

Sensor system for precise inline thickness measurements
thicknessGAUGE

- Compact complete solution for precise inline thickness measurements up to 50 mm
- For many types of surfaces / materials due to different sensor technologies
- Traversing sensors on linear axis
- Fully automatic calibration
- 24 V supply for the entire system
- Integrated software

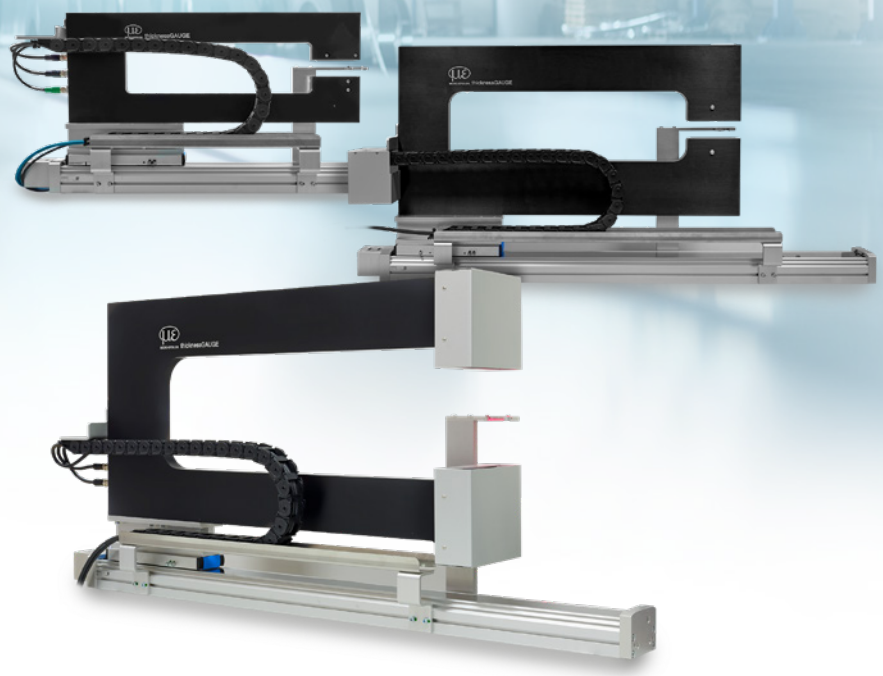

Thickness measurement with high precision

thicknessGAUGE sensor systems are used for precise thickness measurements of strip materials, plates and sheets up to 50 mm. Several models with different sensor types, measuring ranges and measuring widths enable inline thickness measurements of different materials and surfaces based on an unmatched price/performance ratio.

This fully assembled system comprises a stable frame on which two optical distance sensors are fixed, that detect the thickness of the measuring object according to the difference principle. The sensors are perfectly aligned to each other and calibrated during the assembly. Furthermore, thickness calibration at the factory ensures high precision.

A linear axis moves the sensor system from the parking position to the measuring position where a measurement standard for fully automatic calibration is placed.

Operating principle of thickness measurement

The principle of dimensional, geometric thickness measurement includes one optical distance sensor on each side of the material. The distance (=working distance) between the two sensors is determined in a calibration process. The basis of the calibration is a DAkkS-certified measurement standard, to the thickness of which the sum of the distance values is added to determine the operating range.

Compact complete system for easy integration

These compact systems are comprised of an integrated linear unit including motor control, a compact bus terminal box, an automatic calibration unit as well as a multi-touch PC with pre-installed software. The entire system is powered via a 24 V source.

Examples of customized modifications:

- Selectable cable lengths
- Customer-specific axis length
- Encoder
- Interface for fieldbus connection
- Digital inputs/outputs

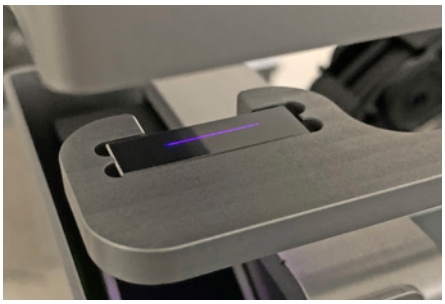

Fully automatic calibration enables reliable measurements (here: thicknessGAUGE C.LP)

Automatic calibration and temperature compensation

To compensate for effects of fluctuating temperatures, the thicknessGAUGE systems are equipped with an in-situ calibration, which is carried out in the parking position. Calibration is performed automatically and at freely selectable intervals. In addition to temperature compensation, in-situ calibration enables proper functioning of the system.

The new class for inline thickness measurements

thicknessGAUGE sensor systems are used for precise thickness measurement in numerous strip materials, plates and sheets. A linear unit with electromechanical drive enables thickness measurements in traversing mode. Alternatively, fixed track measurements are possible for center-line measurements (center thickness) or for thickness measurements on the edges.

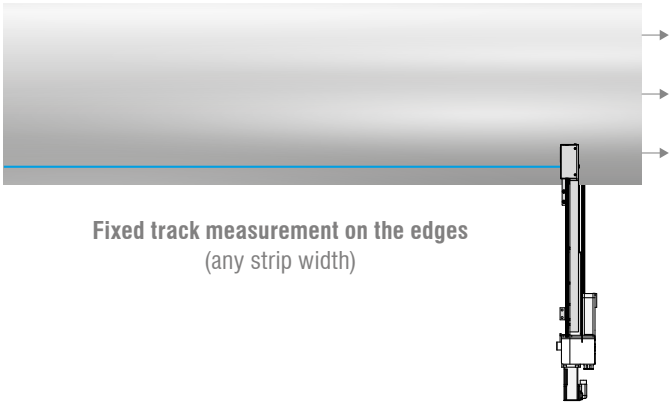

Fixed track measurement on the edges
(any strip width)

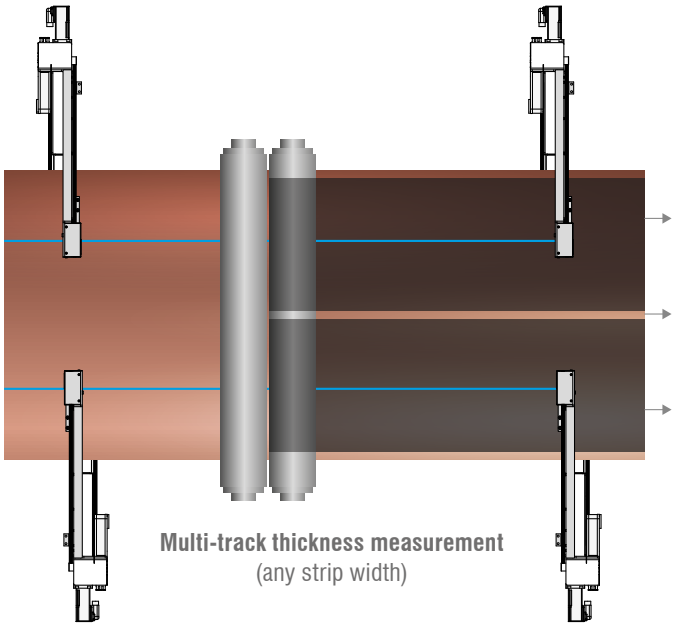

Multi-track thickness measurement
(any strip width)

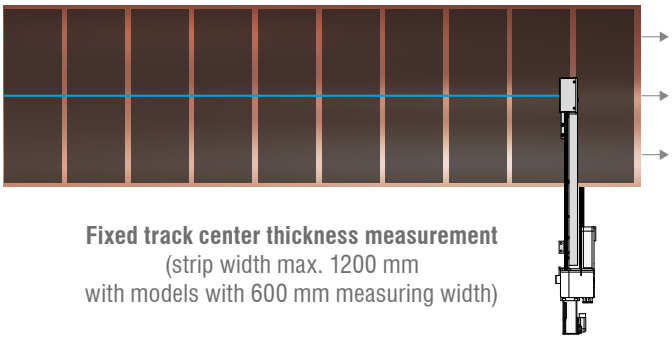

Fixed track center thickness measurement
(strip width max. 1200 mm
with models with 600 mm measuring width)

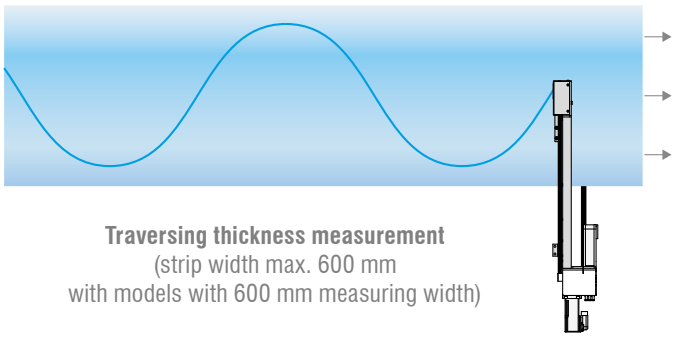

Traversing thickness measurement
(strip width max. 600 mm
with models with 600 mm measuring width)

100% quality control during production

The thicknessGAUGE sensor systems are designed in such a way that they can be used as both initial equipment and for retrofitting of existing facilities. Based on high precision and equipped with intelligent sensor technology, these systems are used in various industries.

Metal production
Thickness measurement of metal film, metal strips and metal plates

Energy industry
Thickness measurement of fuel cells and battery film (coated and uncoated)

Material engineering
Thickness measurement of film, plastic plates, woven materials, wood and ceramics

Models
thicknessGAUGE

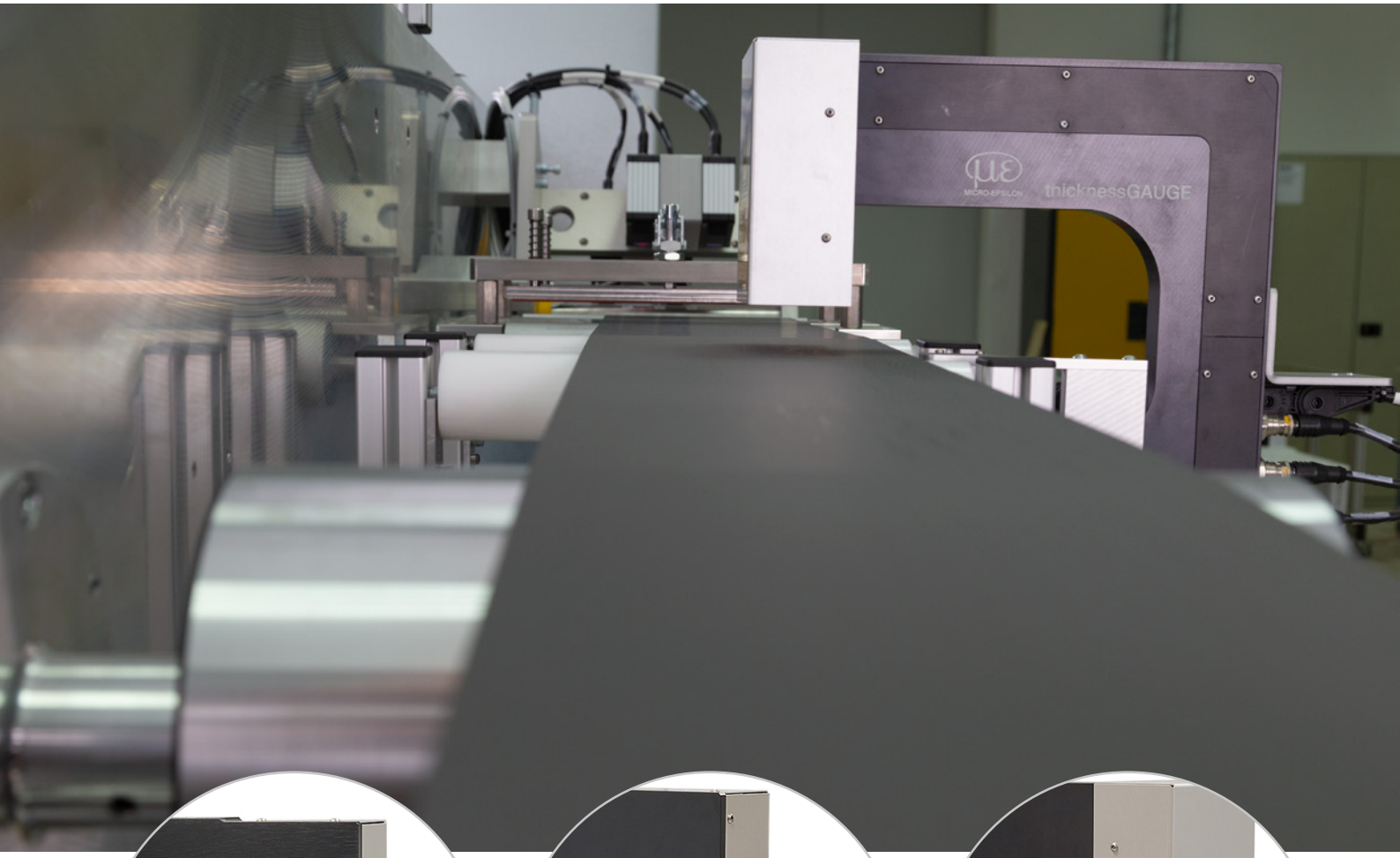

thicknessGAUGE C.LL

Sensor technology used:
Laser triangulation displacement sensors

- Measuring range (thickness): 6 / 50 mm
- Accuracy: ±1 / ±5 µm
- Measuring rate: up to 10 kHz

For common surfaces from plastic to metal

Compact design meets high performance & excellent price/performance ratio

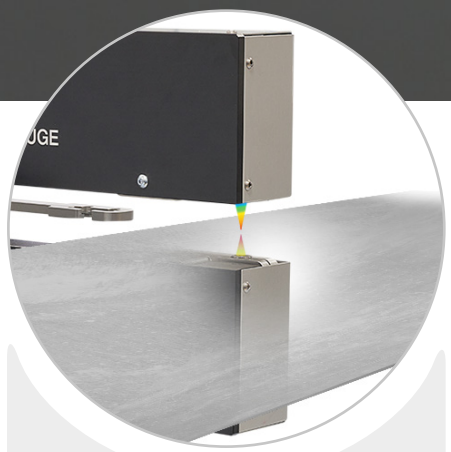

thicknessGAUGE C.C

Sensor technology used:
Confocal chromatic displacement sensors

- Measuring range (thickness): 2.5 mm
- Accuracy: ±0.4 µm
- Measuring rate: up to 10 kHz

For common surfaces as well as mirroring and shiny objects

High performance: fast and high resolution

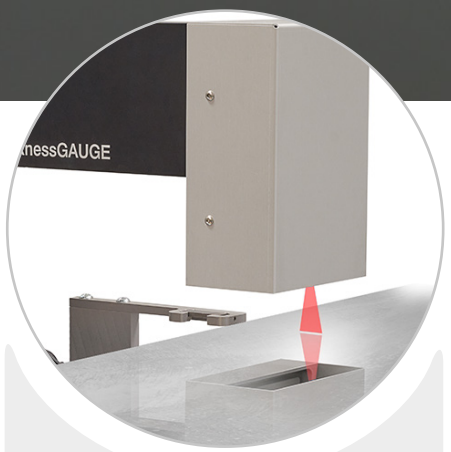

thicknessGAUGE C.LP

Sensor technology used:
Laser profile sensors

- Measuring range (thickness): 15 mm
- Accuracy: ±1.2 µm
- Measuring rate: up to 100 Hz

For common surfaces as well as for structured materials such as perforated plate or embossed plates

Compensation for tilted strips

Powerful analysis and control software

The thicknessGAUGE systems include a multi-touch-capable industrial PC with a comprehensive software package. This allows production data to be displayed, monitored, analyzed and archived. The software offers a wide range of views and measurement modes, such as the display of a fixed-track thickness measurement at any position, a transverse profile view, longitudinal trend display, single value display or measurement chart using false color representation. In addition, individually automatable test equipment capability monitoring and statistical process control (SPC package) are available.

Software features:

- Article database
- Production archive
- Statistical evaluations
- Limit value monitoring with return back to production
- Fieldbus interfaces (optional)
- Verification of gauge/test equipment capability

Size and installation dimensions of the industrial PC with touchscreen

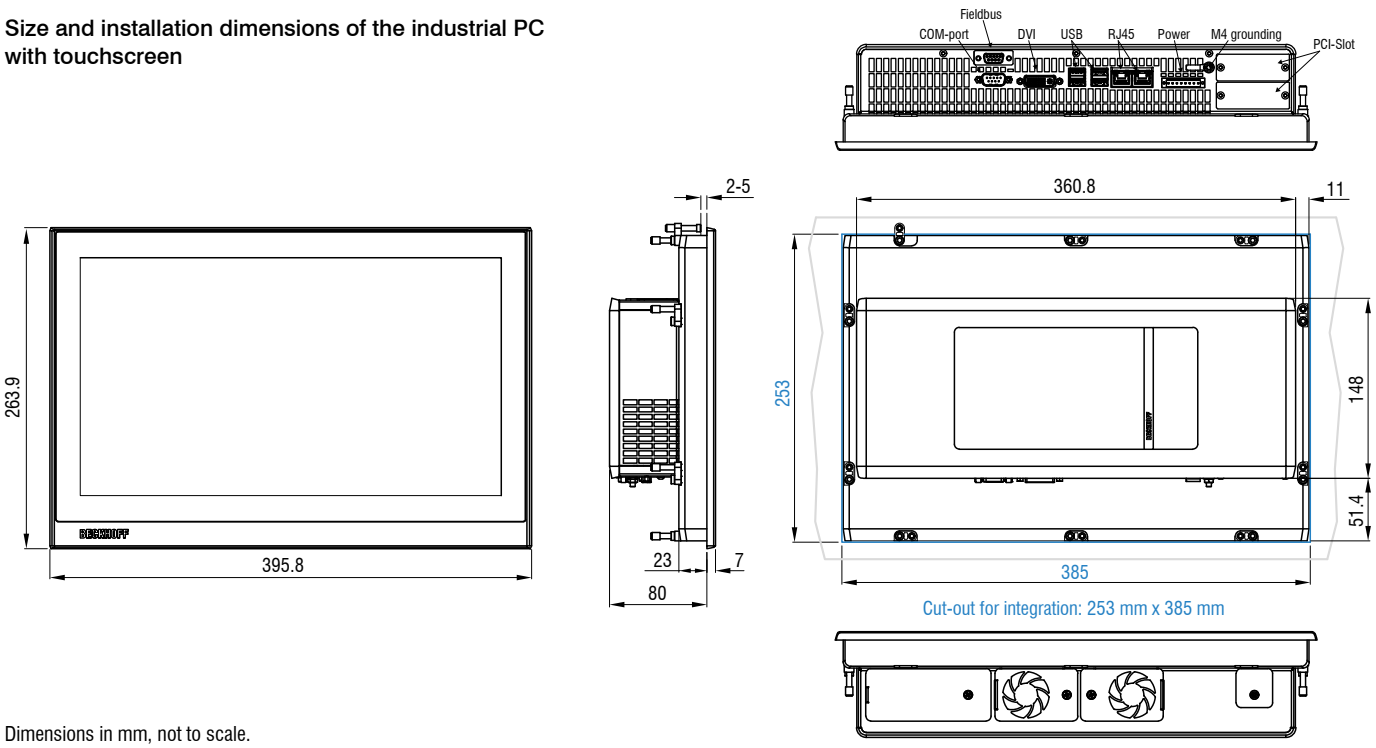

Dimensions in mm, not to scale.

Sensor system for precise thickness measurement (laser triangulation sensors)
thicknessGAUGE C.LL

- Sensor technology used: Laser triangulation displacement sensors
- Laser class 2, no special safety precautions required
- Measuring range (thickness) 6 / 50 mm
- Accuracy: ±1 / ±5 µm
- Measuring rate; up to 10 kHz
- For numerous materials, e.g., plastics, wood and metals
- Compact design meets high performance & excellent price/performance ratio

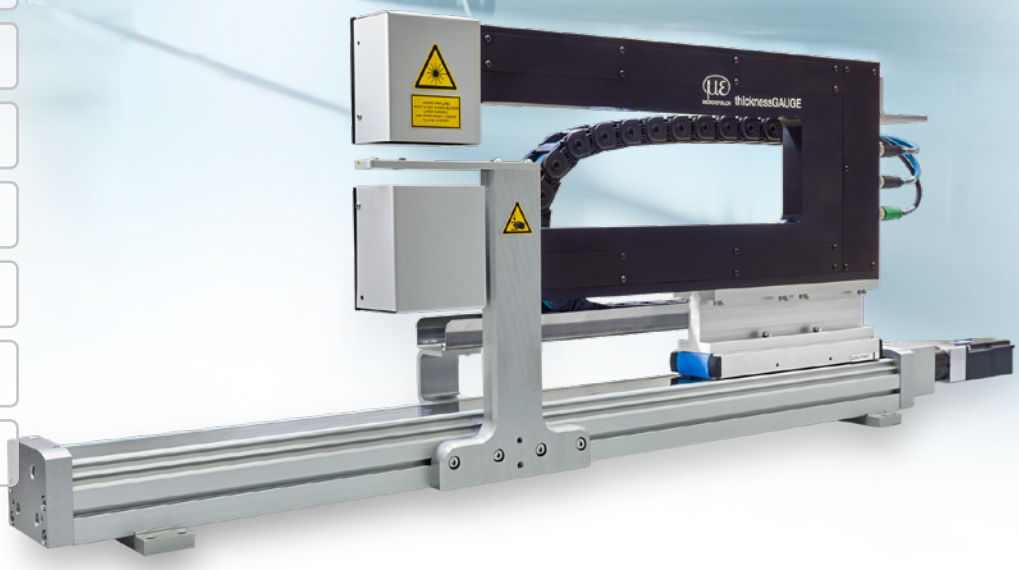

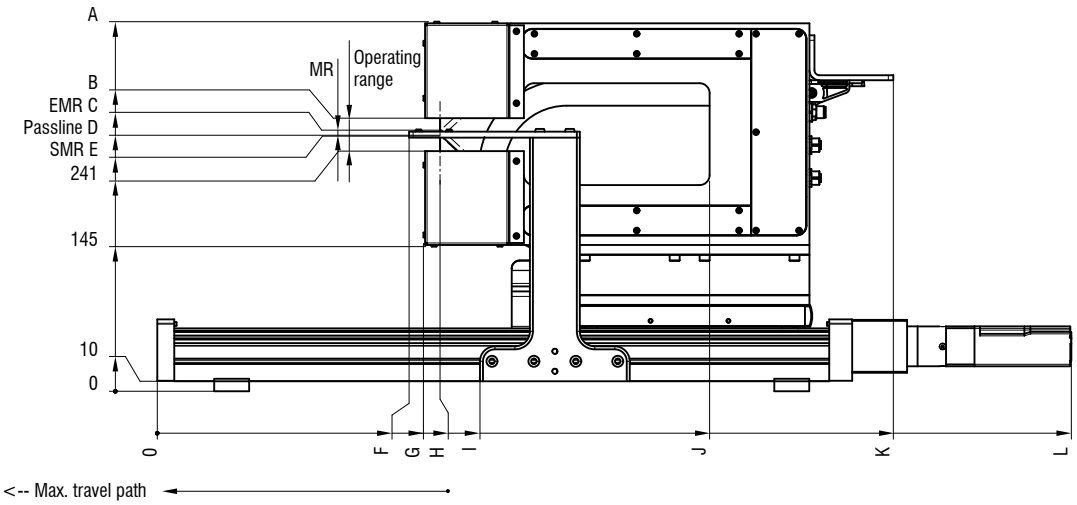

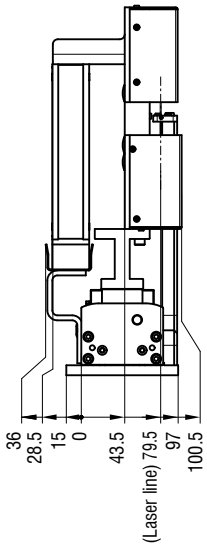

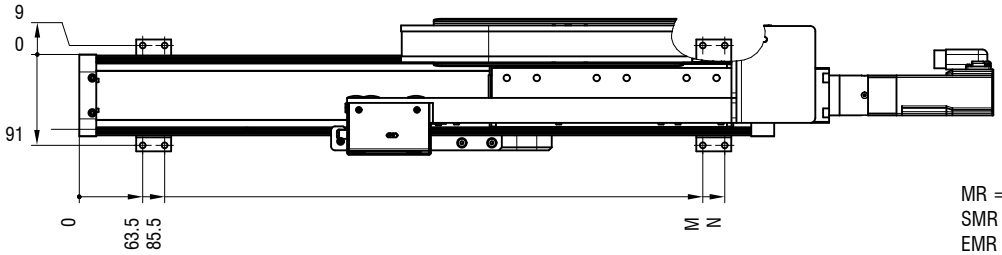

MR = Measuring range
SMR = Start of measuring range
EMR = End of measuring range
Dimensions in mm, not to scale.
Drawing of industrial PC, see page 5.

Model	A	B	C	D	E	F	G	H	I	J	K	L	M	N
C.LL-6/200						252	267	283	323	553	737	916	624.5	646.5
C.LL-6/400	370	274	261.5	256.4	255.5	232	247	263	303	733	937	1116	824.5	846.5
C.LL-6/600						235	249	265.5	305.5	916	1140	1316	1024.5	1046.5
C.LL-50/200						252	268	283	323	553	737	916	624.5	646.5
C.LL-50/400	458	362	328.5	286	278.5	232	247	263.2	303	713.2	937.2	1116	824.5	846.5
C.LL-50/600						234.5	249	265.5	305.5	915.5	1139.5	1316	1024.5	1046.5

Model		C.LL-6/200	C.LL-6/400	C.LL-6/600
Article number		4350127.811	4350127.812	4350127.813
Measuring width		200 mm	400 mm	600 mm
Operating range		33 mm		
Measuring range		6 mm		
Max. travel path [1]		380 mm	580 mm	780 mm
System accuracy [2]		±1 µm		
Resolution		0.1 µm		
Measuring rate		up to 10 kHz		
Calibration		Automatic		
Weight	Axis, motor and C-frame	13.7 kg	17.2 kg	20.4 kg
	Bus terminal box and panel IPC	14 kg		
Supply voltage		24 V		
Humidity		5 % RH ... 95 % RH (non-condensing)		
Protection class (DIN EN 60529)		IP40 (bus terminal box IP54)		
Temperature range	Storage	-20 ... 65 °C		
	Operation	5 ...45 °C		
Control and display elements		Panel-IPC with thicknessCONTROL software included in the scope of supply		
Special features		Compact bus terminal box measuring just 300 x 300 x 210 mm		

[1] Other lengths on request
[2] 2 Sigma; data valid for diffusely reflecting, metallic measuring standard (DAkkS certified)

Model		C.LL-50/200	C.LL-50/400	C.LL-50/600
Article number		4350127.820	4350127.821	4350127.822
Measuring width		200 mm	400 mm	600 mm
Operating range		121 mm		
Measuring range		50 mm		
Max. travel path[1]		380 mm	580 mm	780 mm
System accuracy[2]		±5 µm		
Resolution		1 µm		
Measuring rate		up to 10 kHz		
Calibration		Automatic		
Weight	Axis, motor and C-frame	15.2 kg	19.9 kg	23.6 kg
	Bus terminal box and panel IPC	14 kg		
Supply voltage		24 V		
Humidity		5 % RH ... 95 % RH (non-condensing)		
Protection class (DIN EN 60529)		IP40 (bus terminal box IP54)		
Temperature range	Storage	-20 ... 65 °C		
	Operation	5 ...45 °C		
Control and display elements		Panel-IPC with thicknessCONTROL software included in the scope of supply		
Special features		Compact bus terminal box measuring just 300 x 300 x 210 mm		

[1] Other lengths on request
[2] 2 Sigma; data valid for diffusely reflecting, metallic measuring standard (DAkkS certified)

Sensor system for precise thickness measurement (confocal chromatic sensors)
thicknessGAUGE C.C

- Sensors used: Confocal chromatic displacement sensors
- Measurement with white light, no safety precautions required
- Measuring range thickness: 2.5 mm
- Accuracy: ±0.4 µm
- Measuring rate: up to 10 kHz
- Precise thickness measurement on mirroring and shiny surfaces

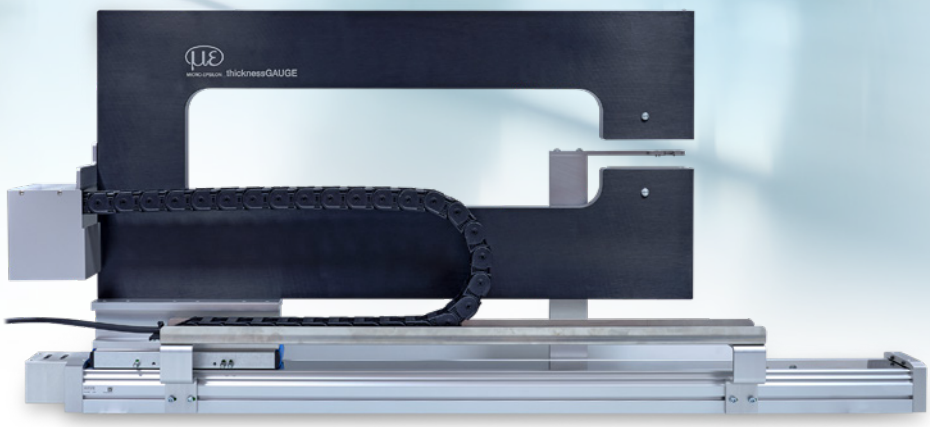

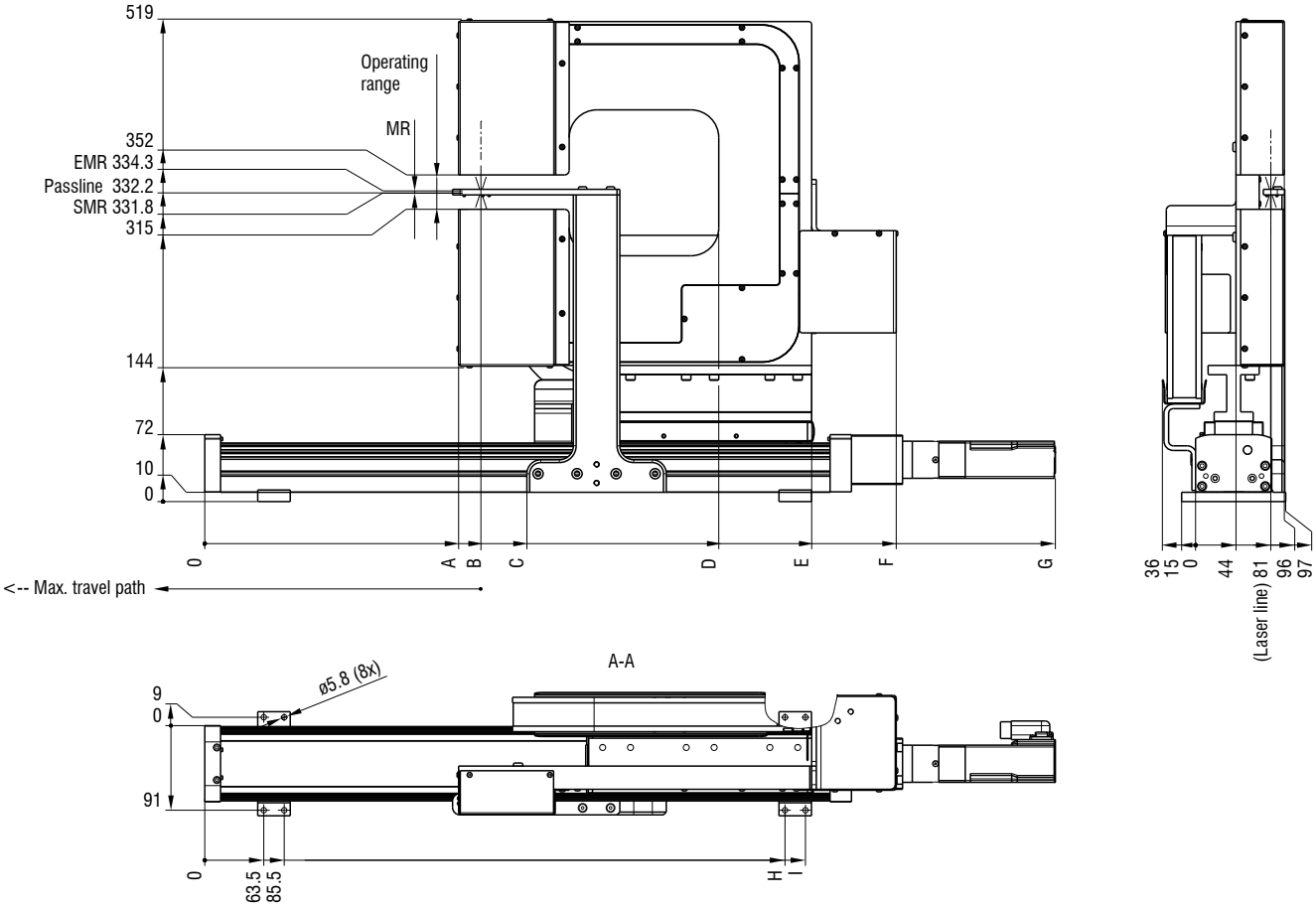

Model	A	B	C	D	E	F	G	H	I
C.C- 2,5/200	273	297	347	653	553	744	916	624.5	646.5
C.C- 2,5/400	273	297	347	853.2	753.2	945.9	1116	824.5	846.5
C.C- 2,5/600	276	300	349	1056	941	1147	1316	1024.5	1046.5

MR = Measuring range
SMR = Start of measuring range
EMR = End of measuring range
Dimensions in mm, not to scale.
Drawing of industrial PC, see page 5.

Model		C.C-2.5/200	C.C-2.5/400	C.C-2.5/600
Article number		4350127.920	4350127.921	4350127.922
Measuring width		200 mm	400 mm	600 mm
Operating range		32 mm		
Measuring range		2.5 mm		
Max. travel path[1]		380 mm	580 mm	780 mm
System accuracy[2]		±0.4 µm		
Resolution		40 nm		
Measuring rate		max. 10 kHz		
Calibration		Automatic		
Weight	Axis, motor and C-frame	19.8 kg	24.3 kg	28.4 kg
	Bus terminal box and panel IPC	15.9 kg		
Supply voltage		24 V		
Humidity		5 % RH ... 95 % RH (non-condensing)		
Protection class (DIN EN 60529)		IP40 (bus terminal box IP54)		
Temperature range	Storage	-20 ... 65 °C		
	Operation	5 ...45 °C [3]		
Control and display elements		Panel-IPC with thicknessCONTROL software included in the scope of supply		
Special features		Compact bus terminal box measuring just 300 x 400 x 210 mm		

[1] Other lengths on request
[2] 2 Sigma; data valid for high-gloss, metallic measuring standard (DAkkS certified)
[3] The temperature range for bus terminal boxes is limited to 5 ... 40 °C

Sensor system for precise thickness measurement (laser profile sensors)
thicknessGAUGE C.LP

- Sensor technology used: Laser profile sensors
- Laser class 2M, no special safety precautions required
- Measuring range thickness: 15 mm
- Accuracy: ±1.2 µm
- Measuring rate: up to 100 Hz
- For structured materials, e.g., perforated and embossed plates
- Best-fit line possible
- Compensation for tilted strips

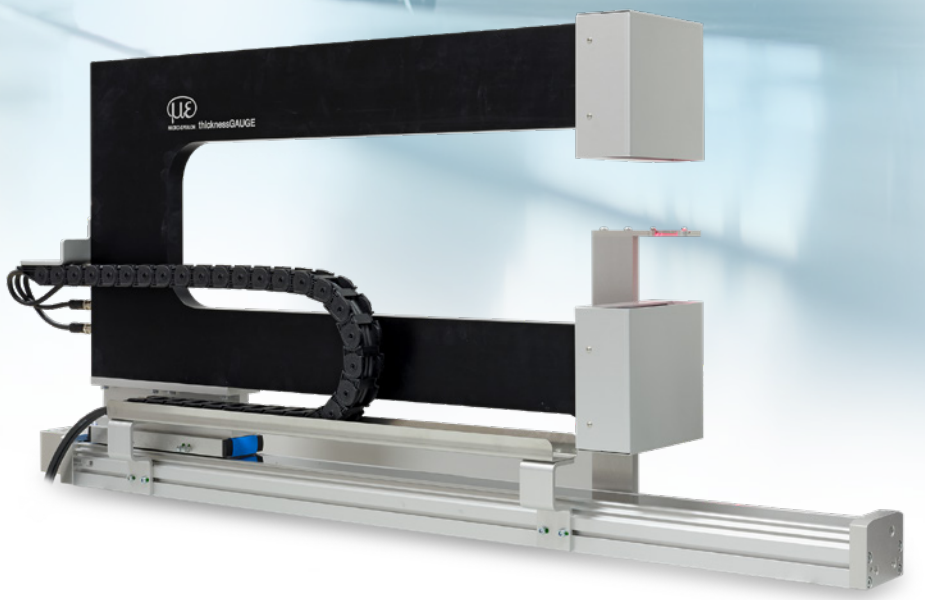

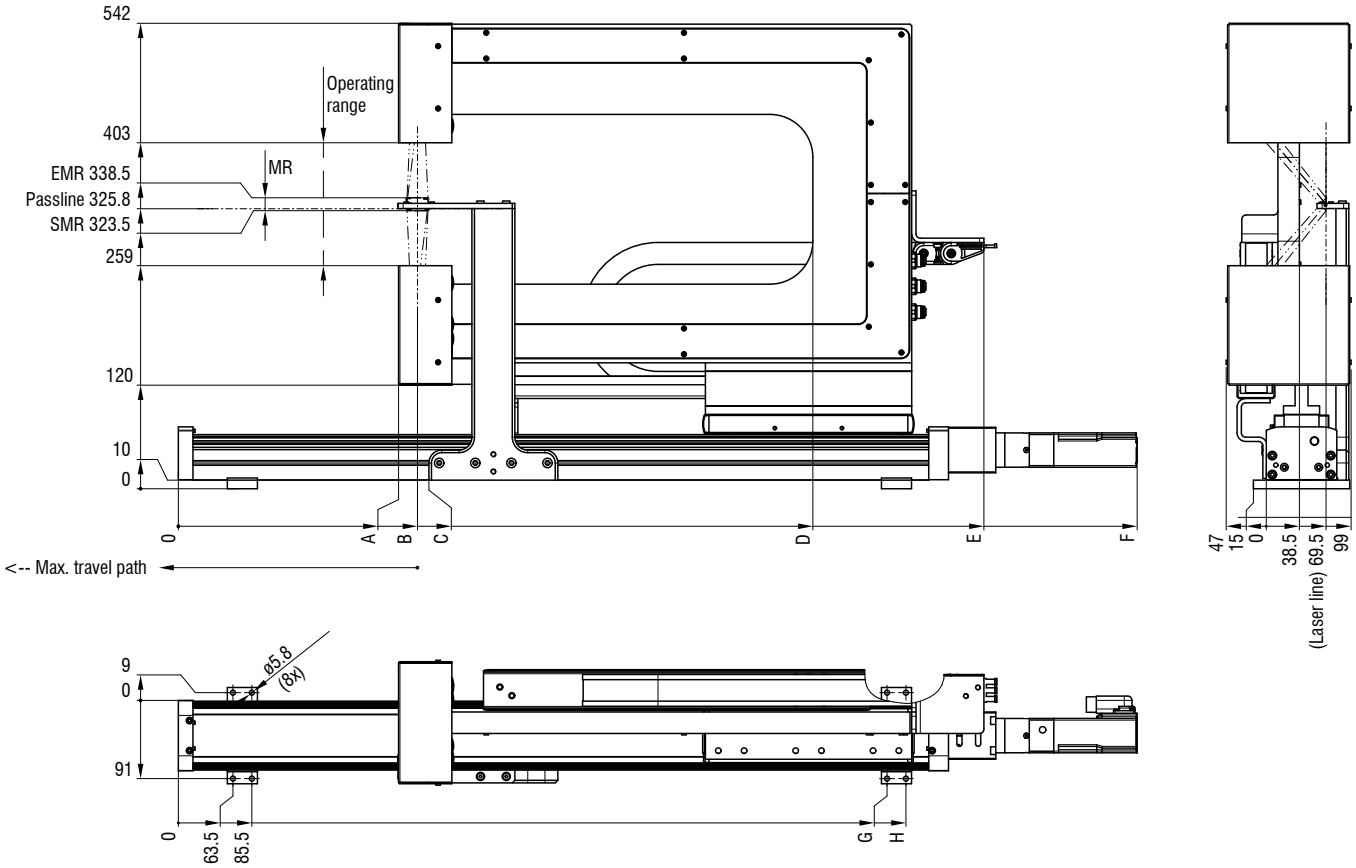

Model	A	B	C	D	E	F	G	H
C.LP-15/200	271	293.2	307	563	737	916	624.5	646.5
C.LP-15/400	256	278	292	738	937	1116	824.5	846.5
C.LP-15/600	224	245.5	259	916	1140	1316	1024.5	1046.5

MR = Measuring range
SMR = Start of measuring range
EMR = End of measuring range
Dimensions in mm, not to scale.
Drawing of industrial PC, see page 5.

Model		C.LP-15/200	C.LP-15/400	C.LP-15/600
Article number		4350127.720	4350127.721	4350127.722
Measuring width		200 mm	400 mm	600 mm
Operating range		144 mm		
Measuring range		15 mm		
Max. travel path[1]		380 mm	580 mm	780 mm
System accuracy[2]		±1.2 µm		
Resolution		0.2 µm		
Measuring rate		100 Hz		
Calibration		Automatic		
Weight	Axis, motor and C-frame	17.6 kg	22.3 kg	26.8 kg
	Bus terminal box and panel IPC	14.1 kg		
Supply voltage		24 V		
Humidity		5 % RH ... 95 % RH (non-condensing)		
Protection class (DIN EN 60529)		IP40 (bus terminal box IP54)		
Temperature range	Storage	-20 ... 65 °C		
	Operation	5 ...45 °C		
Control and display elements		Panel-IPC with thicknessCONTROL software included in the scope of supply		
Special features		Compact bus terminal box measuring just 300 x 300 x 210 mm		

[1] Other lengths on request
[2] 2 Sigma; data valid for diffusely reflecting, metallic measuring standard (DAkkS certified)

System design

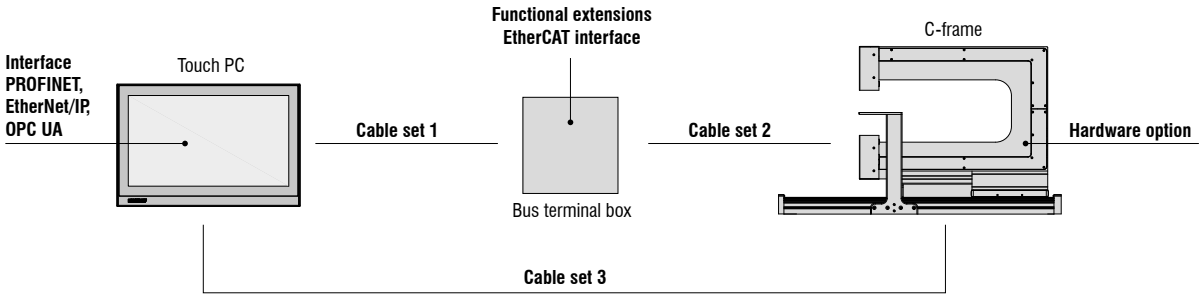

Standard accessories

Can be used for the following thicknessGAUGE models

	Description	Article number	C.LP-xx	C.LL-xx	C.C-xx
Cable set 1	free length 5 m	4350318	✔	✔	✔
	free length 10 m	4350318.01	✔	✔	✔
	free length 20 m	4350318.02	✔	✔	✔
Cable set 2	free length 3 m	4350930	✔		
	free length 5 m	4350930.01	✔		
	free length 8 m	4350930.02	✔		
	free length 3 m	4350932		✔	
	free length 8 m	4350932.01		✔	
	free length 3 m	4350933			✔
	free length 8 m	4350933.01			✔
Cable set 3	free length 3 m	4350931	✔		
	free length 8 m	4350931.01	✔		
	free length 18 m	4350931.02	✔		
Functional extensions	Extension digital I/O (8x input, 8x output)	4350934	✔	✔	✔
	Extension encoder input RS422 (5 V)	4350935	✔	✔	✔
	Extension encoder input HTL (24 V)	4350936	✔	✔	✔
Interfaces	Interface EtherCAT (additional bus terminal required)	4350937	✔	✔	✔
	Interface PROFINET	4350917	✔	✔	✔
	Interface EtherNet/IP	4350924	✔	✔	✔
	Interface OPC UA	4350938	✔	✔	✔
Hardware option	thicknessGAUGE C-drive turned	4350940	✔	✔	✔

- When using several extensions or with the EtherCAT interface, a larger bus terminal box may be necessary (increased space requirement for the EtherCAT bus)
- Other interfaces or other cable lengths on request

Modifications reserved / Y9766737-B032094GKE

MICRO-EPSILON
MICRO-EPSILON USA
8120 Brownleigh Dr. · Raleigh, NC 27617 / USA
Phone +1/919/787-9707 · Fax +1/919/787-9706
me-usa@micro-epsilon.com · **www.micro-epsilon.com**