MICRO-EPSILON

Operating Instructions

optoNCDT ILR 1183

ILR 1183-30

MICRO-EPSILON Eltrotec GmbH
Manfred-Wörner-Straße 101

73037 Göppingen / Germany

Tel. +49 (0) 7161 / 98872-300
Fax +49 (0) 7161 / 98872-303
e-mail info@micro-epsilon.de
www.micro-epsilon.com

Contents

1. Safety ... 7
1.1 Symbols Used ... 7
1.2 Warnings ... 7
1.3 Notes on CE Marking ... 8
1.4 Intended Use ... 9
1.5 Proper Environment ... 9

2. Laser Class ... 9

3. Functional Principle, Technical Data ... 11

4. Delivery ... 14
4.1 Unpacking, Included in Delivery ... 14
4.2 Storage ... 14

5. Installation ... 15
5.1 Sensor Mounting ... 15
5.2 Reflector Mounting ... 16
5.3 Electrical Connections ... 17
5.3.1 Power Supply, SSI-Interface ... 18
5.3.2 Profibus ... 19
5.4 Profibus Interface ... 19
5.4.1 ID Number ... 19
5.4.2 Connecting Conditions ... 19
5.4.3 GSD File ... 19
5.4.4 Slave Address ... 20
5.4.5 Bus Termination ... 20
5.4.6 Baud Rate ... 20
5.4.7 Segment Length ... 20
5.4.8 Wiring Diagram ... 21
5.5 SSI Interface ... 22
5.6 Switching Outputs ... 23
5.7 Trigger Input ... 25

6. Operation ... 27

7. Profibus Interface ... 28
7.1 Slave Address Setting ... 28
7.2 Selection of Operating Mode ... 29
7.3 Configuration Data ... 29
7.4 Cyclical Data Exchange – Input (Slave -> Master) ... 29
7.5 Cyclical Data Exchange – Output (Master -> Slave) ... 30
7.6 Parameter Data ... 31
7.7 Diagnostic Data ... 33

8. Control Commands ... 36
8.1 Modes ... 36
8.1.1 DM - Single Distance Measurement ... 36
8.1.2 DT - Distance Tracking ... 36
8.1.3 DW - Distance Tracking With White Target (10 Hz) ... 36
8.1.4 DX - Distance Tracking With Cooperative Target (50 Hz) ... 37
8.1.5 DF - Distance Measurement with External Trigger ... 37
8.2 Parameter ... 37
8.2.1 Class 2 Function ... 37
8.2.2 Extended Diagnostics ... 37
8.2.3 Scale Factor ... 38
8.2.4 Trigger Mode ... 38
8.2.5 Trigger Level ... 38
8.2.6 Trigger Delay ... 38
8.2.7 Error Reaction ... 39
8.2.8 Measuring Time ... 39
8.2.9 Display Offset ... 40
8.2.10 Switching Point Output 1 / 2 ... 40
8.2.11 Hysteresis Output 1 / 2 ... 40
8.2.12 Diagnostic Interval ... 41
8.2.13 Average ... 41

9. Malfunctions, Troubleshootings ... 42
9.1 Malfunctions ... 42
9.2 Troubleshootings via Profibus ... 42

10. Cleaning ... 44

11. Liability for Material Defects 44
12. Service, Repair 45
13. Decommissioning, Disposal 45
Appendix
A 1 Optional Accessory 46
A 2 Factory Settings 46

1. Safety

System operation assumes knowledge of the operating instructions.

1.1 Symbols Used

The following symbols are used in these operating instructions:

⚠ CAUTION	Indicates a hazardous situation which, if not avoided, may result in minor or moderate injury.
NOTICE	Indicates a situation that may result in property damage if not avoided.
➡	Indicates a user action.
i	Indicates a tip for users.

1.2 Warnings

⚠ CAUTION

Caution - use of controls or adjustments or performance of procedures other than those specified herein may result in hazardous radiation exposure.

Avoid unnecessary laser radiation to be exposed to the human body.
- Switch off the sensor for cleaning and maintenance.
- Switch off the sensor for system maintenance and repair if the sensor is integrated into a system.

Safety devices must not be defeated or otherwise rendered ineffective.
> Risk of injury

NOTICE

Refrain from using the sensor in an explosive environment.
> Damage to or destruction of the sensor and/or other proximate equipment

Cable connectors must not be plugged or unplugged, as long as voltage is supplied. Remember to turn voltage supply off before you begin working on cable connections.
> Damage to or destruction of the sensor

The supply voltage must not exceed the specified limits.
> Damage to or destruction of the sensor

Avoid shocks and impacts to the sensor.
> Damage to or destruction of the sensor

Protect the cables against damage.
> Failure of the measuring device

Do not turn the module on if there is fogging or soiling on its optical parts.
> Failure of the measuring device

Do not touch any of the module's optical parts with bare hands. Proceed with care when removing dust or contamination from optical surfaces.
> Failure of the measuring device

i Information and warning signs must not be removed.

1.3 Notes on CE Marking

The following apply to the ILR 1183:
- EU Directive 2014/30/EU
- EU Directive 2011/65/EU, "RoHS" category 9

Products which carry the CE mark satisfy the requirements of the EU directives cited and the European harmonized standards (EN) listed therein. The EU Declaration of Conformity is available to the responsible authorities according to EU Directive, article 10, at:

MICRO-EPSILON Eltrotec GmbH
Manfred-Wörner-Straße 101
73037 Göppingen / Germany

The measuring system is designed for use in industrial environments and meets the requirements.

1.4 Intended Use

The sensor is designed for use in industrial and laboratory applications. It is used for

- displacement measurement
- for special measuring functions

- The sensor must only be operated within the limits specified in the technical data, see Chap. 3.
- The sensor must be used in such a way that no persons are endangered or machines and other material goods are damaged in the event of malfunction or total failure of the sensor.
- Take additional precautions for safety and damage prevention in case of safety-related applications.

1.5 Proper Environment

- Protection class: IP 65
- Operating temperature: -10 to +50 °C (+14 to +122 °F)
- Storage temperature: -20 to +70 °C (-4 to +158 °F
- Humidity: < 65 % (no condensation)
- Ambient pressure: atmospheric pressure

2. Laser Class

The optoNCDT ILR 1183 sensor operates with a wavelength of 650 nm (visible, red). The maximum optical output is ≤ 1 mW. The sensors are classified in Laser Class 2 (Class II).

Class 2 (II) lasers are not notifiable and a laser protection officer is not required either.

The housing of the optical sensors may only be opened by the manufacturer. For repair and service purposes the sensors must always be sent to the manufacturer.

The laser warning labels for Germany have already been applied. Those for other non German-speaking countries an IEC standard label is included in delivery and the versions applicable to the user‘s country must be applied before the equipment is used for the first time.

i Do not look directly into the laser beam!
Close your eyes or turn away promptly if laser radiation strikes your eyes.

The following warning label is attached on the sensor housing (top side):

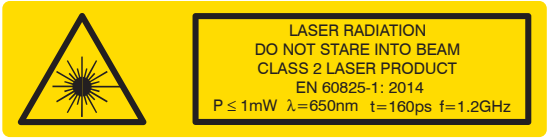

IEC label

Only for USA

i If both warning labels are disguised in operation mode the user must add additional warning labels.

During operation of the sensor the pertinent regulations according to EN 60825-1 on “radiation safety of laser equipment“ must be fully observed at all times. The sensor complies with all applicable laws for the manufacturer of laser devices.

Although the laser output is low looking directly into the laser beam must be avoided. Due to the visible light beam eye protection is ensured by the natural blink reflex.

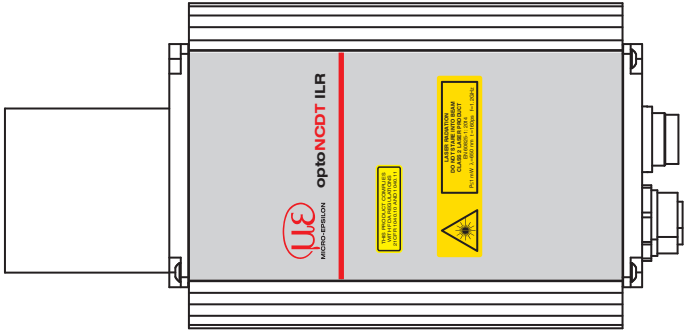

Fig. 1 True reproduction of the sensor with its actual location of the warning labels

3. Functional Principle, Technical Data

The optoNCDT ILR 1183 is a laser range finder to measure distances from 0.1 m to more than 150 m with inpoint accuracy. A given target can be clearly identified with the help of a red laser sighting point. In terms of operating reach, the optoNCDT ILR 1183 performs depending on the reflectance, morphology and qualities of the target to be measured.

The range finder works based on comparative phase measurement. It emits modulated high-frequency light which is diffusely reflected back from the target with a certain shift in phase to be compared with a reference signal. From the amount of phase shift, a required distance can then be determined with millimeter accuracy.

A distance measurement cycle can be triggered:
- via the Profibus
- from an external trigger source (external trigger mode)

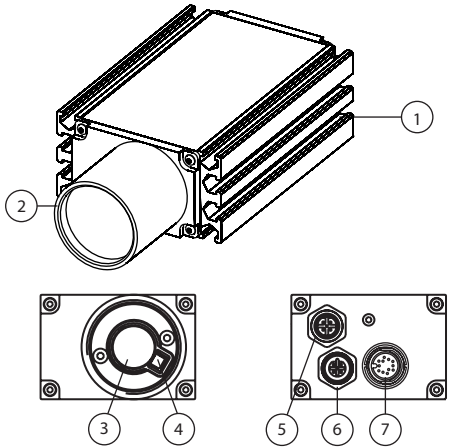

Legend
1 Installation slot for mounting
2 Equalizer tube (anodized)
3 Receiver optics
4 Sender optics
5 Profibus-IN
6 Profibus-OUT
7 Power supply/SSI

Fig. 2 Elements of a sensor

Special performance features are:
- Profibus interface with broad range of parameter setting options via Profibus
- SSI interface
- Two switching outputs, each with selectable parameter settings
- External trigger input, with selectable parameter settings
- Capable of operating at outdoor temperatures from +5 °C to +30 °C with ±2 mm accuracy
- Up to 50 m reach for distance measurement, with potential for 150 m reach if additional reflectors are mounted onto the target
- Visible laser beam for easier sighting.

The sensor measures the distance to moving and static targets:
- in the range of 0.1 ... 50 m on diffuse surfaces,
- between 50 m and 150 m on reflectors.

Technical data

Model	**ILR 1183**
Measuring range [1]	0.1 m ... 50 m on natural, diffusely reflecting surfaces, and up to 150 m on a reflection board
Linearity [2]	±2 mm (+15 °C … +30 °C), ±5 mm (-10 °C … +50 °C) ±2 mm (+59 °F ...+86 °F), ±5 mm (+14 °F ...+122 °F)
Resolution	0.1 mm
Repeatability	≤ 0.5 mm
Response time [1]	20 ms ... 6 s
Max. carrier motion speed	4 m p. sec in “DX” operating mode
Laser acc. to IEC 60825-1/ EN 60825-1	Red 650 nm, Laser safety class 2, power output ≤ 1 mW, Beam diameter < 11 mm in 10 m distance Beam diameter < 35 mm in 50 m distance Beam diameter < 65 mm in 100 m distance
Laser divergency	0.6 mrad
Operating temperature	-10 °C … +50 °C (+14 °F ... to +122 °F)
Storage temperature	-20 °C … +70 °C (-4 °F ... to +58 °F)

Model	**ILR 1183**
Switching outputs	Open Collector, HIGH = U_V – 2 V / LOW < 2 V (max 500 mA), short-circuit-proof; switching threshold and hysteresis selectable
Trigger input	Trigger edge and delay selectable, trigger pulse of max. 24 V
Serial interface	SSI Interface (RS422), 24 bit, gray-coded, Transfer rate: 50 kHz ... 1 MHz, 200 µs break
Profibus data interface [3]	Profibus RS485 DP-V0 slave under IEC 61158 / IEC 61784, Transfer rate: 9.6 kbaud … 12 MBaud, identno. 0x09CB, ILR809CB.GSD, PNO Profile Encoder Class 1/2, configuration of measuring parameters, output of measured values and error messages, parameters and PB-address are stored in NVRAM
Operating mode	Individual measurement, external trigger, distance tracking, continuous measurement
Analog output	-
Trigger input	One input with HIGH signal level > 11 V and LOW signal level < 6.5 V 2.5 mA input current at 24 V, trigger edge and delay selectable, trigger pulse of max. 24 V
Power supply	10 … 30 VDC
Max. power consumption	< 3.2 W at 24 VDC
Connection	1 x 12-pole (Binder series 723) M16, 2 x 5-pole (Binder series 766) M12 B-coded
Protection class	IP 65
Dimensions	210 mm x 99 mm x 51 mm
Housing material	Extruded aluminum profile with powder-coat paint finish
Weight	980 g

1) Conditional on target reflectance, ambient light influences and atmospheric conditions
2) Statistic variation 95 %
3) Sensor settings occur about this interface.

4. Delivery

4.1 Unpacking, Included in Delivery

1 Sensor optoNCDT ILR 1183-30

1 Instruction manual

1 CD with GSD file and operating instructions

Optional accessories, separately packed:

1 Power supply-/output cable PC11xx with 3 m up to 30 m length (subject to order)

1 Profibus IN/OUT-cable PBC11xx with 5 and 10 m

1 Female connector for power supply/SSI

1 Female and male connector for Profibus

➡ Carefully remove the components of the measuring system from the packaging and ensure that the goods are forwarded in such a way that no damage can occur.

➡ Check the delivery for completeness and shipping damage immediately after unpacking.

➡ If there is damage or parts are missing, immediately contact the manufacturer or supplier.

4.2 Storage

Storage temperature:	-20 up to +70 °C
Humidity:	< 65 % (non condensing)

5. Installation

The sensor optoNCDT ILR 1183 is an optical sensor for measurements with millimeter accuracy. Make sure it is handled carefully when installing and operating.

5.1 Sensor Mounting

The sensor is be mounted by means of 4 screws type M6 DIN 934 and 2 groove stones in the installation slots. The laser beam must be directed perpendicularly onto the surface of the target. In case of misalignment it is possible that the measurement results will not always be accurate.

The sensor will be aligned by a visible laser beam with the target. To align the sensor, please comply with the “Instructions for Operation“, see Chap. 6.

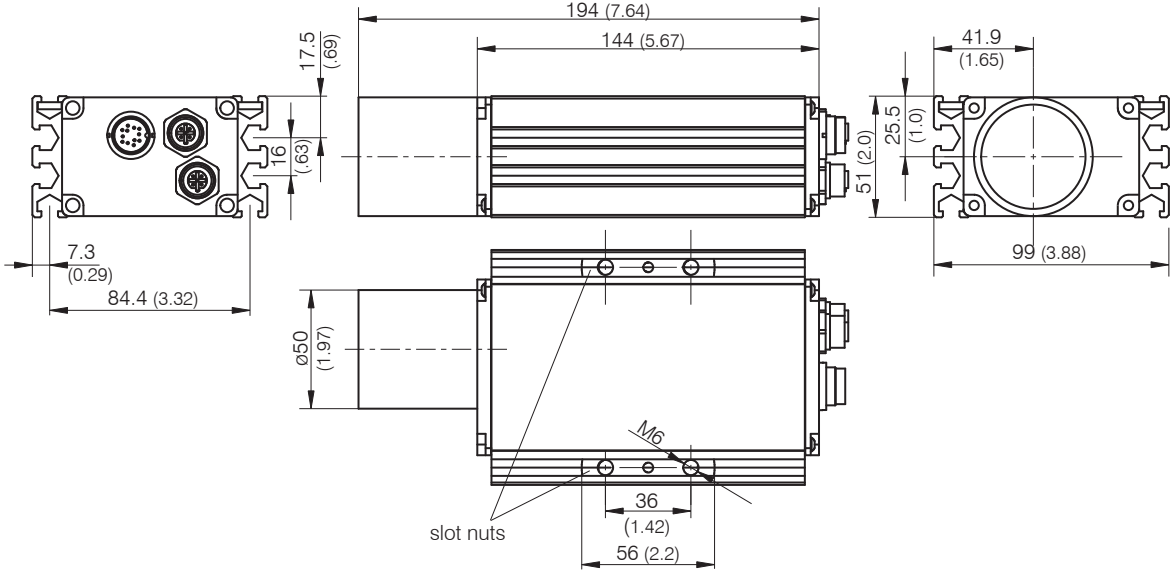

Fig. 3 Dimensional drawing sensor, dimensions in mm, not to scale

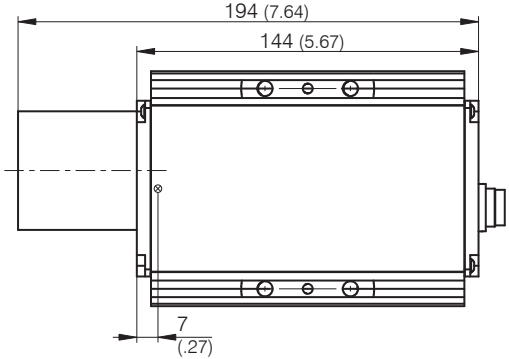

Fig. 4 Offset against zero-edge

The sensor zero-point is located 7 mm behind the outer surface of the front cover inside of the appliance.

5.2 Reflector Mounting

The sensor measures the distance to moving and static targets:
- in the range of 0.1 ... 50 m on diffuse surfaces,
- between 50 m and 150 m on reflectors (for example reflector film from 3M, Scotchlite Engineer Grade type I, series 3290).

It is possible to align the sensor using the measuring laser. When aligning check as follows:

➡ Move the sensor at a very short distance to the reflector (for example < 1 m). The light spot is aligned in the centre of the reflector.

➡ Move the sensor with the longest range to the reflector. Check the position of the light spot at the reflector and set it if necessary.

The light spot must always be in the centre of the reflector whatever the position.

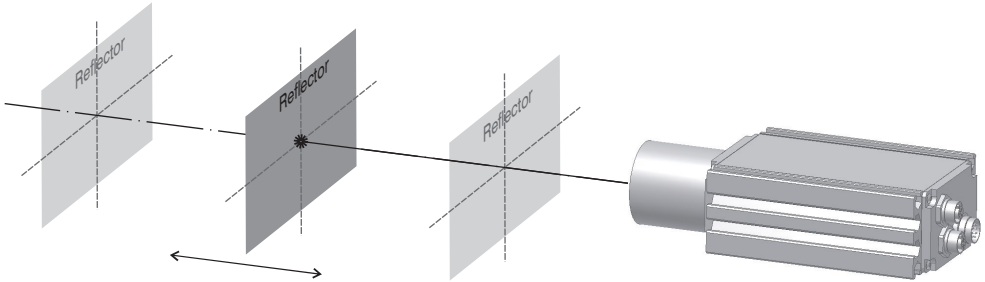

Fig. 5 Sensor orientation at reflector film

5.3 Electrical Connections

NOTICE

Avoid exposed cable ends.
So you prevent any kind of shorts.
The wiring of outputs with input signals can damage the sensor!

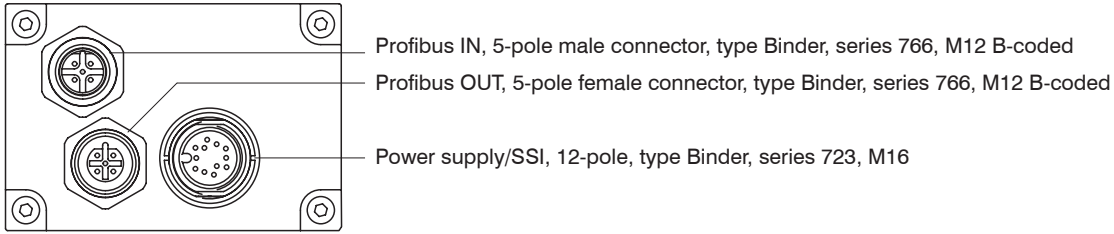

Fig. 6 Connector on the rear side of the sensor

The connectors are located on the rear side of the sensor.

5.3.1 Power Supply, SSI-Interface

The assignment of the power supply/SSI results from a 12-pole round-type (flangemount) series 723 connector from Binder. It is sealed against the casing to comply with IP 65 requirements.

This connector type guarantees optimized screening and a high IP degree. The required counterpart is an adequate female cable connector with grading ring.

A cable set with open ends is optionally available.

Bending radius of the supply and output cable PC11x (available as an optional accessory):
- 47 mm (once)
- 116 mm (permanent)

Pin	Color	Assignment
A	white	SSI C+
B	brown	SSI C-
C	green	TRIG
D	yellow	n.c.
E	grey	SSI D-
F	pink	SSI D+
G	red	power supply 10 ... 30 VDC
H	black	n.c.
J	violet	ground
K	grey/pink	switching output 2
L	red/blue	n.c.
M	blue	switching output 1

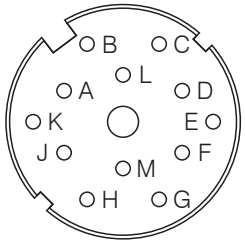

view on solder pin side, 12-pole female cable connector

Fig. 7 Pin assignment for power supply and SSI interface

5.3.2 Profibus

Pin	Assignment Profibus IN	Assignment Profibus OUT
1	n.c.	power supply + 5 V
2	A	A
3	n.c.	ground
4	B	B
5	screen	screen

For operation via Profibus, other Profibus participants may connect to the 5-pole male connectors (A-cable, B-cable). The Profibus may terminate or continue at the 5-pole male connector Profibus OUT. Some kind of termination device must always be provided at the end of the Profibus. Supply voltage for the bus terminator is available at Profibus-OUT.

5.4 Profibus Interface

5.4.1 ID Number

The sensor has been registered with “PROFIBUS Nutzerorganisation e.V. (PROFIBUS User Organization, incorporated society) under ID number $09CB_{HEX}$.

5.4.2 Connecting Conditions

The sensor is prepared for connection to any type of Profibus DP structure. The related Profibus DP Master must be capable of sending a parameterization telegram. The Master’s own configuring tool (typically configuring software) must support representation of the parameters which are contained in the sensor Master file (GSD file).

5.4.3 GSD File

The GSD file is named ILR809CB.GSD. It includes the two files “ILR1143.dib” and “ILR1143.bmp” which are necessary for representation of the sensor in the configuring tool. For information regarding integration of these files, please consult the special documentation parts that relate to the configuring tool.

5.4.4 Slave Address

A Profibus address can be assigned, with due consideration of other participants in bus communications, to any number from 0 to 125. The setting of an address can be achieved by triggering an SSA command via the Profibus. For details on how to change a previously set slave address via the configuring tool, you should consult the special tool documentation. In as-delivered state, the slave is set to the address “4”. A currently set slave address is permanently stored in the EEPROM. It is also preserved in the event of a power failure. Where more than one slave (ILR 1183) communicates via one Profibus, they must be connected in series and each of them must be assigned a different address.

5.4.5 Bus Termination

For sensor operation, the bus must be fitted with an external terminator. 5 V supply voltage for bus termination can be drawn from the male connector Profibus-OUT. This voltage is electrically isolated from actual operating voltage supply (VCC) and provides 100 mA current load capacity. The terminating network is available as an optional accessory.

5.4.6 Baud Rate

The sensor is prepared to automatically detect any of the following baud rates: 9.6 / 19.2 / 93.75 / 187.5 / 500 kbaud and 1.5 / 3 / 6 / 12 MBaud, respectively.

5.4.7 Segment Length

The maximum segment length between two Profibus participants depends on the selected Baudrate. Observe the following segment lengths:

Baud rate	Segment length
9.6 ... 93.75 kBaud	1200 m
187.5 kBaud	1000 m
500 kBaud	400 m
1.5 MBaud	200 m
3 ... 12 MBaud	100 m

Use cable of type A for cabling in accordance with these segmenting limits. This cable type provides the following characteristics:

- Surge impedance 135 ... 165 OhmW
- Capacitance per unit length ≤ 30 pf/m

- Loop impedance ≤ 110 Ohm/km
- Wire diameter > 0.64 mm
- Wire cross-section > 0.34 mm²

5.4.8 Wiring Diagram

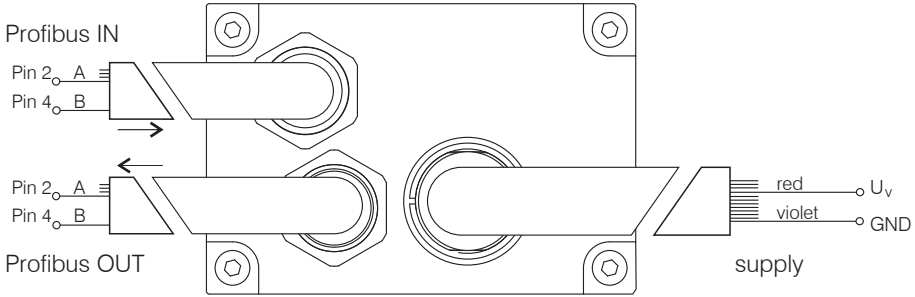

Fig. 8 Minimum wiring configuration of Profibus interface

5.5 SSI Interface

Parameter settings for SSI interface operation can be made via the Profibus.
Default state set on initial product delivery: DT Mode.

Characteristics:
- Transfer rates from 50 kHz to 1 MHz, note the actual cable length.
- It provides a data length of 24 bits and uses Gray code.
- The pause interval between two bit sequences is 200 µsec.
- All interface inputs are electrically isolated. They provide an isolation strength of 500 V.

➡ Use screened twisted-pair cables for guaranteeing undisturbed data transmission.

This requirement is met by the cable type which you can find quoted in the optional accessories.

The following table shows selectable clock rates with corresponding cable lengths that must not be exceeded:

Clock rate	Cable length
< 500 kHz	< 25 m
< 400 kHz	< 50 m
< 300 kHz	< 100 m
< 200 kHz	< 200 m
< 100 kHz	< 400 m

The sensor has a SSI data interface (SSI = synchronous serial interface). At the request of a SSI clock generator, the sensor triggers a distance measurement cycle, sending the data bit by bit to a controller for processing in the same order as it arrives at the shift register. This process occurs in the measuring mode that was most recently stored in the sensor. A desired measuring mode can be selected via the Profibus.

The SSI interface works independently of the Profibus interface.

For SSI interface operation, the wiring diagram is as follows:

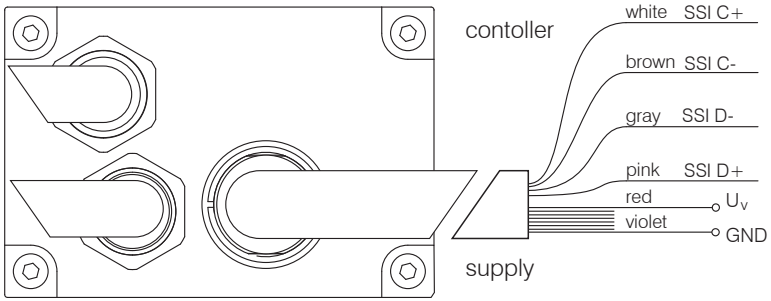

Fig. 9 Wiring of SSI interface operation

5.6 Switching Outputs

Characteristics of the two outputs:
- Signal level HIGH = VCC - 2 V
- Signal level LOW < 2 V
- Max. load carrying capacity 0.5 A
- Short-circuit-proof
- switching threshold and hysteresis selectable

Parameter settings for switching outputs can be made via the Profibus. This function is only available with the Profibus in active state. Each of the two switching outputs allows a given object or state to be monitored for positive or negative excession of its limit values. This is achieved with the help of a user-definable distance threshold value (AC). Which way the particular switching output will switch depends on the mathematical sign of its hysteresis (AH).

Rule:
- Positive hysteresis
  - With increasing distance, the output switches from LOW to HIGH, as soon as AC + AH/2 is exceeded,
  - with decreasing distance, it switches from HIGH to LOW, as soon the distance value falls below AC – AH/2.

- Negative hysteresis
  - With increasing distance, the output switches from HIGH to LOW, as soon as AC +AH/2 is exceeded,
  - with decreasing distance, it switches from LOW to HIGH, as soon the distance value falls below AC – AH/2.

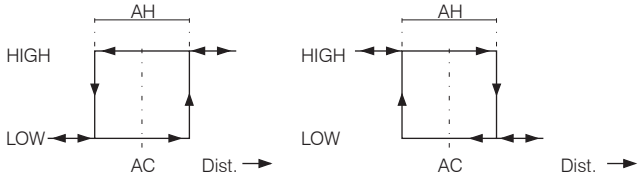

Fig. 10 Digital switching output behavior for positive and negative hysteresis.

- LOW corresponds to a voltage level < 2 V.
- HIGH corresponds to a voltage level of VCC - 2 V

Each switching output is short-circuit proof and rated for a maximum current load of 0.5 A. Parameter settings for switching outputs can be made with the Profibus master, using the Encoder profile with Class 2 functionality.

The following parameters may be configured (refer to GSD File):

- ExtUserPrmData = 29 “Switching point output 1 (31-16)” for AC switching output 1
- ExtUserPrmData = 30 “Switching point output 1 (15-0)” for AC switching output 1
- ExtUserPrmData = 31 “Switching point output 2 (31-16)” for AC switching output 2
- ExtUserPrmData = 32 “Switching point output 2 (15-0)” for AC switching output 2
- ExtUserPrmData = 33 “Hysteresis output 1 (31-16)” for AH alarm hysteresis 1
- ExtUserPrmData = 34 “Hysteresis output 1 (15-0)” for AH alarm hysteresis 1
- ExtUserPrmData = 35 “Hysteresis output 2 (31-16)” for AH alarm hysteresis 2
- ExtUserPrmData = 36 “Hysteresis output 2 (15-0)” for AH alarm hysteresis 2

Further switching functionalities, for example, monitoring for specified operating ranges may be accomplished by combining the two switching outputs.

The wiring diagram for utilization of switching outputs is as follows:

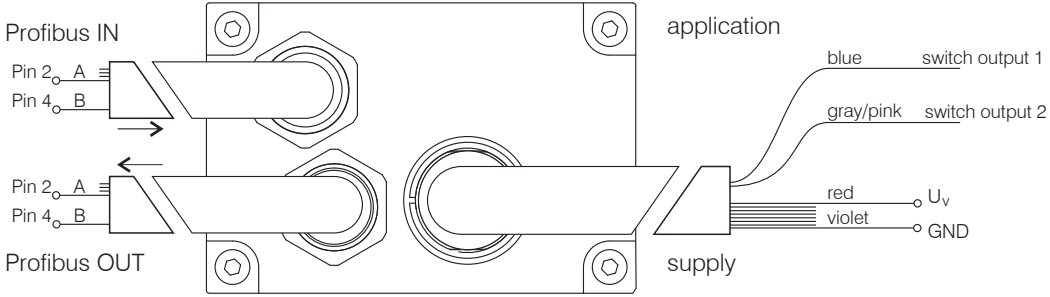

Fig. 11 Wiring of switching outputs

5.7 Trigger Input

Characteristics of the input:

- Signal level HIGH > 11 V
- Signal level LOW < 6.5 V
- Input current 2.5 mA at 24 V
- Trigger edge and delay selectable
- Trigger pulse of max. 24 V

Parameter settings for the trigger input can be made using Profibus tools. This function is only enabled with the Profibus in active state. The trigger input allows a distance measurement cycle to be triggered by an external signal that is applied as a voltage pulse. Available setting options are the delay time (Trigger Delay) until measurement actually starts and the pulse edge to be selected for triggering (Trigger Level). Trigger mode (0 ... Off, 1 ... On) must be turned on. Parameter settings for Trigger Input can be made with the help of the Profibus Master, using the Encoder profile and Class 2 encoder functionality.

The following parameters are available for configuration (refer to GSD File):
- ExtUserPrmData = 20 “Trigger Mode” for trigger mode
- ExtUserPrmData = 21 “Trigger Level” for trigger level
- ExtUserPrmData = 25 “Trigger Delay (31-16)” for trigger delay
- ExtUserPrmData = 26 “Trigger Delay (15-0)” for trigger delay

For detection of a clock edge, the following voltage signals are required:
- 24 V > HIGH > 11 V
- 0 V < LOW < 6.5 V

Wiring connections for working with the trigger input are as follows:

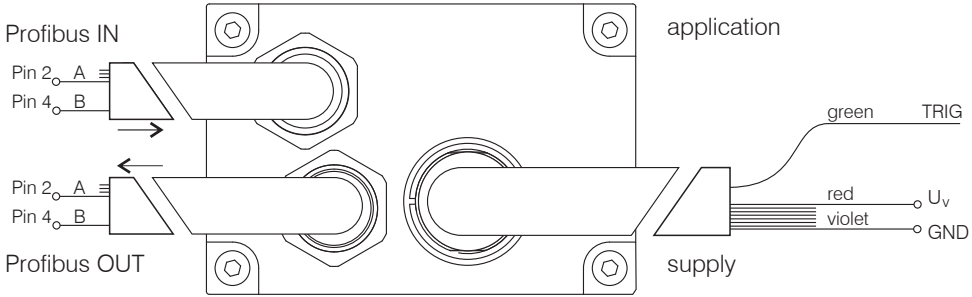

Fig. 12 Wiring of trigger input

6. Operation

- Connect and firmly screw on Profibus terminals.
- Connect the terminals for the power supply/SSI.
- Protect all cable ends, which you don‘t use, before you turn on the power supply. So you avoid shorts.

The user is required to implement:
- the application-specific wiring
- the application-specific parameterization of the Profibus, the slave address.

- Turn-on the voltage supply for the sensor.
- Trigger the distance measurement.

The laser comes on and Profibus or SSI launches measurement.

- Install the sensor using the visible laser spot as part of preparative actions in the designated working site, oriented onto the target and keep it in a stable position. The target to be measured should preferentially have a homogeneous, white surface.
- Fix the sensor.

The sensor provides a visible laser beam for greater convenience in alignment. Its visibility is conditional on the amount of ambient light present and on the type of surface of the target to be measured.

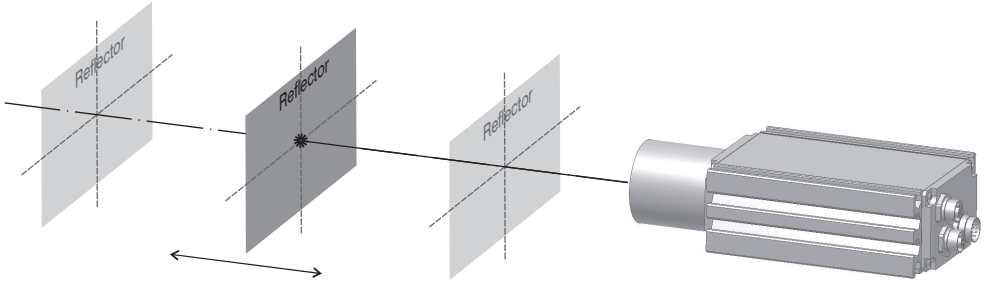

Fig. 13 Measurement against a reflector

7. Profibus Interface

The Profibus Interface for the sensor operation control is identical with the Standard DP V0 Profibus (with peripherals decentralized) where V0 designates the version. Telegrams are byte-oriented. A byte is also referred to as an Octet in Standard Profibus terminology. From a user's point of view, the following types of telegrams are required to accomplish communication:

- cyclical data exchange telegrams (DataEx)
- diagnostic telegrams
- parameter setup telegrams

The various Profibus slaves of identical or similar functionality are described in profiles. These make it easier for users to work with PB slaves from different manufacturers, which provide identical functionality.

For operation of the sensor in Profibus mode, the encoder profile of the Profibus (order no. 3062 of PNO) is supported. The sensor works as a linear encoder in this case. Within the available encoder profile capabilities, the sensor can work as a class1 or class2 encoder (recommended). All versions are accomplished via a GSD file. In addition to specific profile data, the sensor provides specific device settings. These concern laser control and diagnosing aspects.

Profile	Class	Functions
Encoder	class 1	only input simple diagnosis minimal parameter setup options
	class 2	input and output (Preset) extended diagnosis extended parameter setup options
Sensor	class 1	see encoder profile
	class 2	additional vendor-specific diagnosis and parameter setups

7.1 Slave Address Setting

Slave address 4 is factory-set.

Changes can be made via the Profibus Master. A desired address can be assigned using the SSA (Set Slave Address) signal.

7.2 Selection of Operating Mode

DT measuring mode is factory-set.

Changes can be implemented in parameter setup mode, using bits 5 ... 7 of parameter setup byte 26.

- 0 = 000 = DF
- 1 = 001 = DT
- 2 = 010 = DW
- 3 = 011 = DX
- 4 = 100 = DM

Where modified data are to be written onto the EEPROM, bit 4 of parameter setup byte 26 must be set to ’1’.

7.3 Configuration Data

For input and output data, the following configurations are available:

Mandatory		
class 1	D1 hex	2 words input consistency
class 2	F1 hex	2 words of input data, 2 words of output data for preset value, consistency
Optional		
class 1	D0 hex	not implemented in the sensor
class 2	F0 hex	not implemented in the sensor

7.4 Cyclical Data Exchange – Input (Slave -> Master)

The sensor outputs position data which are mathematically signed. The SF (scale factor) parameter can be used to invert a given mathematical sign. Resolution is also defined via SF.

Octets in a telegram are arranged in a Profibus-compliant manner (big endian), that means, the MSB always comes first and the LSB is always the last one.

Octet	Bit	Type	Output
1…4		signed 32	position data from encoder

7.5 Cyclical Data Exchange – Output (Master -> Slave)

The most significant bit in a preset value (bit 32) defines the validity of that preset.

Octet	Bit	Type	Output
1…4		signed 32	Preset value Standard mode: MSB = 0 (bit 31) Preset mode: MSB = 1 (bit 31)

The “Preset“ value is available for setting a current output value to a desired value. This is achieved with the help of an internal offset M_{offset}. By setting of bit 31, this offset value can be changed. The following assignments are valid:

M_{DataEx} value transported to the Profibus in cyclical data exchange mode

M_{Laser} reading determined by the laser

M_{offset} intern calculated offset value

M_{Preset} value transferred with “Preset“ function

- Cyclical calculation of: $M_{DataEx} = M_{Laser} + M_{offset}$

- The value for M_{offset} is not permanently stored in the sensor, that means, it will be lost on turning power off. The offset value can also be stored as a parameter in Octet 32 ... 35.

- If bit 31 of M_{Preset} is set, M_{Offset} will be calculated in such a manner that the following equation is met: $M_{Preset} = M_{Laser} + M_{offset}$

The new offset value can be read in the diagnostic data as Octet 30 ... 33.

7.6 Parameter Data

The following minimum parameter setups apply to class 1 devices:

Octet	Bit	Type	Output	
1		byte	station status	(profibus default)
2		byte	wd_fact_1 (watch dog)	(profibus default)
3		byte	wd_fact_2	(profibus default)
4		byte	min_tsdr	(profibus default)
5 ... 6		word	word ident number	(profibus default)
7		byte	group ident	(profibus default)
8		byte	spc3 spec	(profibus default)
9	0	bool	unused	
	1	bool	class 2 functionality on/off	
	2	bool	commissioning diagnostic on/off	
	3	bool	commissioning diagnostic on/off	
	4	bool	reserved for future use	
	5	bool	reserved for future use	
	6	bool	reserved for manufacturer	
	7	bool	reserved for manufacturer	

The following additional parameters apply to class 2 devices:

Octet	Bit	Type	Output
10 … 13		unsigned 32	unused – linear encoder (Measuring units per revolution)
14 … 17		unsigned 32	linear encoder (Measuring range in ..)
18 … 25		byte(s)	unused – (reserved for future use)
26	0	bool	unused
	1	bool	trigger level 0 = H > L 1 = L > H (TDnn x)
	2 ... 3	2 bit number	error reaction 0 … 2 (SEnn)
	4	bool	0= non action 1= write on EEPROM (store all parameters)
	5 ... 7	3 bit number	measure mode (0 = DF, 1 = DT, 2 = DW, 3 = DX, 4 = DM)
27		byte	measure time [STnn] 0 ... 25
28 ... 31		signed 32	trigger delay [TDnn] 0 ... 9999
32 ... 35		signed 32	display offset [OFnnnn]
36 ... 39		signed 32	output1 switch limit 0 ... 5000000 [ACnn]
40 ... 43		signed 32	output2 switch limit 0 ... 5000000 [ACnn]
44 ... 47		signed 32	output1 switch hysteresis –5000000 ... 5000000 [AHnn]
48 ... 51		signed 32	output2 switch hysteresis –5000000 ... 5000000 [AHnn]
52 ... 53		word	diag update time in 0.1 sec
54		byte	average time [SAnn] 1 ... 20
55 ... 58		signed 32	scale factor [SFnn] n*0.00001 (1.0 = 100000)

Since the sensor is a linear encoder that measures absolute distances, the four parameters

- “code sequence”
- ”scaling function control“
- ”Measuring units per revolution“
- ”Measuring range in measuring units“

will be ignored.

7.7 Diagnostic Data

Class 2 functionality	Commissioning diagnostic	Diagnostic information
-	0	6 byte standard diagnosis
0	1	16 byte class 1 diagnosis
1	1	61 byte class 2 diagnosis

Octet	Bit	Type	Output	
1		byte	diag state 1	(profibus default)
2		byte	diag state 2	(profibus default)
3		byte	diag state 3	(profibus default)
4		byte	master address	(profibus default)
5 ... 6		word	ident number	(profibus default)
			class 1 diagnostic	
7		byte	group ident	(profibus default)
8		byte	spc3 spec	(profibus default)
9	0	bool	unused	
	1	bool	class 2 functionality on/off	
	2	bool	commissioning diagnostic on/off	
	3	bool	unused	
	4	bool	reserved for future use	
	5	bool	reserved for future use	
	6	bool	reserved for manufacturer	
	7	bool	reserved for manufacturer (operation status: parameter byte 9)	
10		byte	encoder type (=7 absolute linear encoder)	
11 ... 14		unsigned 32	single turn resolution => 100000 nm = 0.1 mm	
15 ... 16		unsigned 16	no. of distinguishable revolutions – unused (=0)	
			class 2 diagnostic	
17	0	bool	E98 – Timeout SIO	
	1	bool	E99 – unknown error	

18 ... 19	0	bool	E15 – reflex signal to weak, use target board
	1	bool	E16 – reflex signal too strong, use target board
	2	bool	E17 – steady light (that means insolation)
	3	bool	E18 – only in DX-mode (50 Hz): variance between measured and precalculated value too great
	4	bool	E23 – temperature below – 10 °C (+ 14 °F)
	5	bool	E24 – temperature above + 60 °C (+ 140 °F)
	6	bool	E31 – wrong EEPROM checksum, hardware error
	7	bool	E51 – failure to set avalanche voltage of laser diode; cause: stray light or hardware error
	8	bool	E52 – laser current too strong / defective laser
	9	bool	E53 – failure to set one or more parameters in EEPROM (consequence: division by 0)
	10	bool	E54 – hardware error (PLL)
	11	bool	E55 – hardware error
	12	bool	E61 – selected parameter is illegal; invalid command was triggered
	13	bool	E62 – 1. hardware error 2. false value for interface communications (SIO parity error)
	14	bool	E63 – SIO overflow
	15	bool	E64 – SIO framing error
20 ... 21		word	warnings – unused (=0)
22 ... 23		word	warnings – unused (=0)
24 ... 25		word	profile version (for example 1.1 = 0110 hex)
26 ... 27		word	software version (for example 1.11 = 0111 hex)
28 ... 31		unsigned 32	operating time (of laser), in units of 0.1 hour
32 ... 35		signed 32	offset value (see Chap. 7.6)
36 ... 39		signed 32	manufacture offset – unused (=0)
40 ... 43		unsigned 32	unsigned 32 measuring units per revolution – unused (=0)
44 ... 47		unsigned 32	unsigned 32 measuring range – unused (=0)
48 ... 57		10 byte	10 byte serial number

58 ... 59		word	word reserved for future use
60		signed byte	laser temperature in °C
61		byte	reserved - unused

Since the sensor is a linear encoder that measures absolute distances, the four parameters

- “code sequence”,
- ”scaling function control“,
- ”measuring units per revolution“
- ”measuring range in measuring units“

will be ignored.

8. Control Commands

8.1 Modes

The various measuring modes are distinguished by the algorithms they use for calculation. The sensor relies on the phase comparison method for normal operation. In order to obtain a precise measured value, the user should perform an appropriate number of single distance shots at different frequencies of a fixed number.

For the DW mode and the DX mode, the number of frequencies and/or the number of single distance shots is limited, which allows for higher measurement frequencies. On the other hand, this also places tighter demands on the quality of operating conditions, for example, targets should be strongly reflecting. The resulting limitations should be taken into account by the user in practical work.

In DT mode or DM mode, the user may define his/her own limits for the maximum time which measurement is to last, by setting appropriate measuring time values by use of the parameter Measuring Time.

8.1.1 DM - Single Distance Measurement

In the DM mode, a single distance shot is triggered. A desired Measuring Time can be set in the Master's configuring tool, using the Encoder profile and Class 2 encoder functionality.

8.1.2 DT - Distance Tracking

The DT mode adjusted ex factory can be chosen for distance measurement of different kinds of surfaces (varying reflectance). This may cause longer measuring times in the case of poor reflectance or sudden jumps in distance.

The minimum measuring time is 160 msec, the maximum time is 6 sec. On expiry of six seconds, measurement will be aborted with an error message. A desired Measuring Time can be set in the Master's configurating tool, using the Encoder profile and Class 2 encoder functionality.

8.1.3 DW - Distance Tracking With White Target (10 Hz)

The DW mode uses a steady measuring rate of 10 Hz. A white target board is a necessary prerequisite for measured values to be stable. There must be no sharp jumps in distance above a value of 16 cm within the area being measured.

8.1.4 DX - Distance Tracking With Cooperative Target (50 Hz)

The DX mode uses a steady measuring rate of 50 Hz. It is primarily intended for applications where there is uniform carrier motion up to a rate of 4 m p. sec. The high measuring rate of 50 Hz is achieved by involving previously measured values in calculation of a currently measured value. Distance jumps greater than 16 cm should be avoided. A white target board is a necessary prerequisite for stable distance readings.

8.1.5 DF - Distance Measurement with External Trigger

In the DF mode, measurement begins on arrival of an external trigger pulse. This trigger pulse releases a single distance shot.

Desired settings for the Measuring Time, the trigger edge (“Trigger Level”) and the delay in triggering (“Trigger Delay”) can be made in the Master’s configuring tool, using the Encoder profile and Class 2 encoder functionality.

Trigger mode must be active.

8.2 Parameter

Settings can be made for each parameter in the Master configuration tool, using the Encoder profile and Class 2 encoder functionality. For a description, you should refer to the special configuring tool documentation.

The configuring tool of the Master uses the GSD file as input to create parameters for the slave. It must have sent these parameters at least once to the slave before the slave will be able to work in cyclical data exchange mode. The slave has been programmed with enough tolerance to allow operation with only its seven byte standard PB parameters (that means without any profile-adapted user parameters). Where the Master is unable to send user parameters, the EEPROM’s previously stored parameters will be used. This may make sense in SSI encoder applications without involvement of a Profibus. In such cases, the sensor must be parameterized once, using the Profibus. The selected parameter settings must then be saved, the Profibus disabled again and the SSI interface terminal be activated.

8.2.1 Class 2 Function

Selects slave type according to Encoder profile.

8.2.2 Extended Diagnostics

Transmits more than six standard diagnostic bytes (16 bytes as Class 1 Slave, 61 bytes as Class 2 Slave).

8.2.3 Scale Factor

Factory setting: Scale factor = 1.

The parameter Scale factor (SF) multiplies a calculated distance value with a factor that can be selected within the range from –10.00000 to +10.00000 to allow changes in resolution setting or output of results in a unit of measure other than the metric system.

Up to five positions after decimal point can be processed.

To make settings for Profibus system operation, SF needs to be multiplied with 100.000. The resulting number must then be converted into a 32-bit hexadecimal number. In Profibus setup mode, a mathematically obtained number can be entered at bytes (Octet) 55 ... 58 of the table of parameter setup data.

SF	Resolution	Long integer	Byte 55		Byte 56		Byte 57		Byte 58	
10	0.1mm	1.000.000	0	0	0	F	4	2	4	0
1	1 mm	100.000	0	0	0	1	8	6	A	0
-1	1 mm	-100.000	F	F	F	E	7	9	6	0
-10	0.1 mm	-1.000.000	F	F	F	0	B	D	C	0
0.3937	1 inch	39.370	0	0	0	0	9	9	C	A
3.28084	0.01 feet	328.084	0	0	0	5	0	1	9	4
1.0936	0.01 yard	109.360	0	0	0	1	A	B	3	0

Fig. 14 Computation examples for the parameter Scale Factor

8.2.4 Trigger Mode

The parameter Trigger Mode enables (1) or disables (0) external triggering.

Factory setting: Trigger mode = 0.

8.2.5 Trigger Level

The parameter Trigger Level defines if measurement will start on a rising (0) or a falling (1) pulse edge.

Factory setting: Trigger level = 0.

8.2.6 Trigger Delay

The parameter Trigger Delay sets the time from the arrival of a trigger pulse to the actual beginning of measurement. It may correspond to any value between 0 and 9999 msec.

Factory setting: Trigger delay = 0.

8.2.7 Error Reaction

The parameter Error Reaction defines how the switching outputs will react if a measurement cycle is found to have been unsuccessful.

Different setting options are available in order to cause error messages to trigger different kinds of response as appropriate for a particular environment in which the sensor operates.

Error reaction	Switching outputs
0	Preserves latest valid measurement state
1	Positive switching hysteresis = LOW, negative switching hysteresis = HIGH
2	Positive switching hysteresis = HIGH, negative switching hysteresis = LOW

Fig. 15 Behavior of the switching outputs

Factory setting: Error reaction = 0.

8.2.8 Measuring Time

The Measuring Time is active in the DM and the DT measuring mode. As a general rule, it may be assumed that the poorer the surface quality of a targeted object the more time will be required by the sensor to determine that target's distance with specified accuracy. For example, if error message E15 is output because of poor reflectance and too small a measuring time value, the setting for measuring must be increased.

The available range for measuring time variation is 0 to 25.

Note: The greater the value which is selected for measuring time the longer the time which will be available for measurement and the smaller the frequency at which measurement will be performed.

"0" value setting is an exception. In this case, the sensor will use its internal criteria for evaluation.

In addition, by varying the Measuring time, one may also configure the measuring frequency. This may prove helpful where data volumes have to be restricted. The following provides an approximated measuring time equation:

Measuring time » Measuring Time × 240 ms (> 0)

Factory setting: Measuring time = 0.

8.2.9 Display Offset

With the parameter Display Offset, the offset may be applied to the measured value (for correction).

Factory setting: Display offset = 0.

8.2.10 Switching Point Output 1 / 2

The parameter Switching Point Output 1 or 2 corresponds to the trigger threshold of switching output 1 or 2 respectively. The trigger threshold behavior is user-definable through the switching hysteresis, see Chap. 8.2.11.

Factory setting: Switching point output 1 = 10000 Switching point output 2 = 20000.

8.2.11 Hysteresis Output 1 / 2

The parameter Hysteresis Output 1 or 2 corresponds to the switching hysteresis of switching output 1 and 2 respectively.

The switching hysteresis defines:

- the behavior of the switching output to a positive or negative excession of a trigger threshold, depending on the mathematical sign of a hysteresis value
- what range will be covered by the switching output, depending on the amount of hysteresis.

The following table shows switching output behavior depending on the mathematical sign of hysteresis:

	Trigger threshold positively exceeded	Trigger threshold negatively exceeded
Positive hysteresis	HIGH	LOW
Negative hysteresis	LOW	HIGH

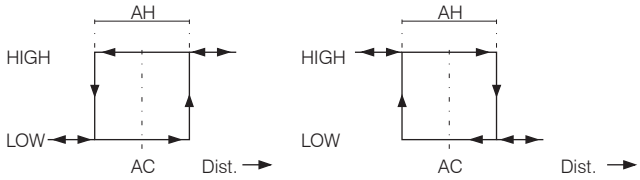

Fig. 16 Behavior of digital switching output for positive and negative hysteresis

Factory setting: Hysteresis output 1 = 100.
Factory setting: Hysteresis output 2 = 100.

8.2.12 Diagnostic Interval

The parameter Diagnostic Interval defines how often diagnostic reports are to be output. A diagnostic report includes information about (but not limited to) the inner device temperature. For generation of diagnostic data, a running distance measurement will be interrupted.

- Range of values: 0 ... 10000
- Time base: 100 ms.

If Diagnostic Interval is set to “0”, diagnostic data will only be output if there was an error.

Intervall » Diagnostics Intervall × 100 ms

Factory setting: Diagnostics Intervall = 10.

8.2.13 Average

The parameter Average allows a floating average value to be calculated from one to twenty measured single values.

Factory setting: Average = 1

Calculation is based on this formula:

$$M_{av} = \frac{\sum_{k=1}^{N} MW(k)}{N}$$

MW = Measuring value
N = Quantity
k = Current index
M_{av} = Average value

Fig. 1: Formula for the floating average value

Method:

Every new measuring value is added, the first (oldest) measuring value is taken out of the averaging.

Example with N = 7:

.... 0 1 $\boxed{2\ 3\ 4\ 5\ 6\ 7\ 8}$ gets to $\frac{2+3+4+5+6+7+8}{7}$ Average value n

.... 1 2 $\boxed{3\ 4\ 5\ 6\ 7\ 8\ 9}$ gets to $\frac{3+4+5+6+7+8+9}{7}$ Average value n +1

9. Malfunctions, Troubleshootings

9.1 Malfunctions

Defaults	Cause	Action for removal
No data coming via Profibus	Faulty Profibus configuration	Check Profibus configuration
Device error (Ext. diagnosis)	Hardware problems	Reship sensor for repair, contact technical support

9.2 Troubleshootings via Profibus

Code	Cause	Action for removal
E15	Excessively poor reflexes	Use target board, observe minimum requirement on measuring distance (> 0.1 m)
E16	Excessively strong reflexes	Use target board do not measure against reflecting surfaces
E17	Too much steady light (for example sun)	Mount sensor in such a position that excessive incidence of steady light is prevented, extend glare protection tube, provide additional light-shielding, for example protective cap
E18	Only in DX mode: too much difference between measured and pre-calculated value	Check path from distance meter to target being measured for obstacles
E23	Temperature below –10 °C/ +14 °F	Provide ambient temperature > -10 °C/ +14 °F
E24	Temperature above +60 °C/ +140 °F	Provide ambient temperature < +47 °C/ +116.6 °F
E31	Faulty EEPROM checksum, hardware error	Service required if fault occurs repeatedly > Reship sensor for repair
E51	Failure to set avalanche voltage 1. straylight 2. hardware error	1. Check target reflectance and ambient light (steady light), make sure that neither target not entry opening of sensor is exposed to light from reflecting surfaces, projectors or sun 2. Service required > reship for repair

E52	Laser current too high / laser defective	Reship sensor for repair Contact technical support
E53	Hardware error	Reship sensor for repair Contact technical support
E54	Hardware error	Reship sensor for repair Contact technical support
E55	Hardware error	Reship sensor for repair Contact technical support
E61	Hardware error	Service required if occurring repeatedly > Reship sensor for repair
E62	Hardware error	Check RS232 settings; if fault persists, reship sensor for repair, contact technical support
E63	SIO overflow	Check time of emitted signals in application software, integrate delay on transmission if necessary
E64	Framing-Error SIO	Reship sensor for repair Contact technical support
E98	Hardware error	Reship sensor for repair Contact technical support

10. Cleaning

- Remove dust from optical surfaces (transmitter and receiver optics) with a blower brush.
- Do not use cleaners that contain organic solvents, when wiping optical surfaces down
- Contact the manufacturer in the case of stubborn contamination or soiling.

NOTICE

Avoid the use of any kind of solvents to clean the sensor.
> Damage of the sensor

Do not open the device. Do not loose any screw at the sensor
> Damage of the sensor

11. Liability for Material Defects

All components of the device have been checked and tested for functionality at the factory. However, if defects occur despite our careful quality control, MICRO-EPSILON Eltrotec or your dealer must be notified immediately.

The liability for material defects is 12 months from delivery.

Within this period, defective parts, except for wearing parts, will be repaired or replaced free of charge, if the device is returned to MICRO-EPSILON Eltrotec with shipping costs prepaid. Any damage that is caused by improper handling, the use of force or by repairs or modifications by third parties is not covered by the liability for material defects. Repairs are carried out exclusively by MICRO-EPSILON Eltrotec.

Further claims can not be made. Claims arising from the purchase contract remain unaffected. In particular, MICRO-EPSILON Eltrotec shall not be liable for any consequential, special, indirect or incidental damage.
In the interest of further development, MICRO-EPSILON Eltrotec reserves the right to make design changes without notification.

For translations into other languages, the German version shall prevail.

12. Service, Repair

If the sensor is defective:

Please send us the affected parts for repair or exchange stating the conditions in which it has operated (applications, conditions and environmental conditions).

If the cause of a fault cannot be clearly identified, please send the entire measuring system to:

MICRO-EPSILON Eltrotec GmbH
Manfred-Wörner-Straße 101
73037 Göppingen / Germany

Tel. +49 (0) 7161 / 98872-300
Fax +49 (0) 7161 / 98872-303
e-mail info@micro-epsilon.de
www.micro-epsilon.com

13. Decommissioning, Disposal

➡ Remove the power supply and output cable from the sensor.

Incorrect disposal may cause harm to the environment.

➡ Dispose of the device, its components and accessories, as well as the packaging materials in compliance with the applicable country-specific waste treatment and disposal regulations of the region of use.

Appendix

A 1 Optional Accessory

PC1100-3/RS232	Power supply- /Output cable-RS232, length 3 m
PBC1100-I/O-5	Profibus In-Out-cable, length 5 m
PBC1100-I-5	Profibus In-cable, length 5 m
PBC1100-I-10	Profibus In-cable, length 10 m
PBC1100-O-5	Profibus Out-cable, length 5 m
PBC1100-O-10	Profibus Out-cable, length 10 m
PBFC1100	Profibus female connector
PBMC1100	Profibus male connector
PBLR1100	Profibus load resistance
ILR-M-PB/USB	Profibus/USB-module + service software

A 2 Factory Settings

Slave address 4	Measure Time 0	Error reaction 0
Measuring mode DT	Display Offset 0	Diagnostic interval 10
Scale factor 1	Switching point output 1 10000	Average 1
Trigger mode 0	Switching point output 2 20000	
Trigger level 0	Hysteresis output 1 100	
Trigger delay 0	Hysteresis output 2 100	

MICRO-EPSILON Eltrotec GmbH
Manfred-Wörner-Straße 101 · 73037 Göppingen / Germany
Tel. +49 (0) 7161 / 98872-300 · Fax +49 (0) 7161 / 98872-303
eltrotec@micro-epsilon.de · www.micro-epsilon.com

X9751185-A051069SWE